BLÅHAKE

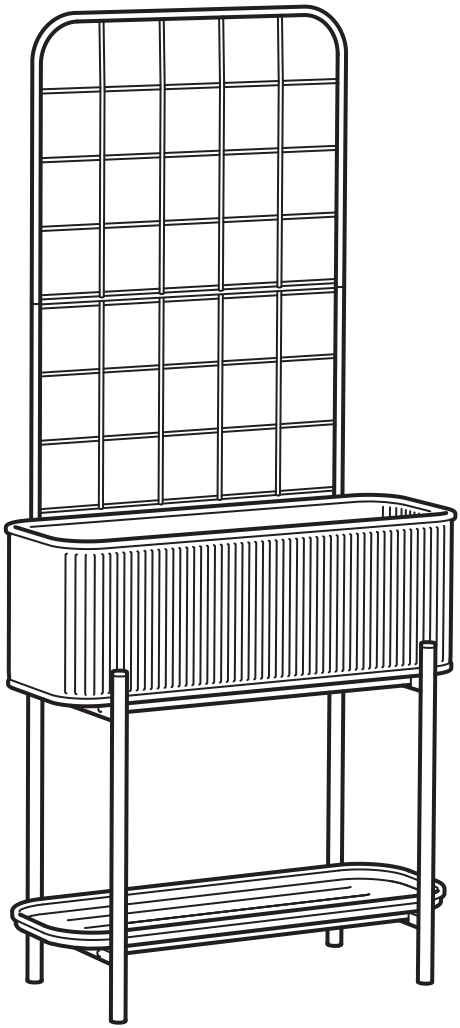

Design and Quality
IKEA of Sweden

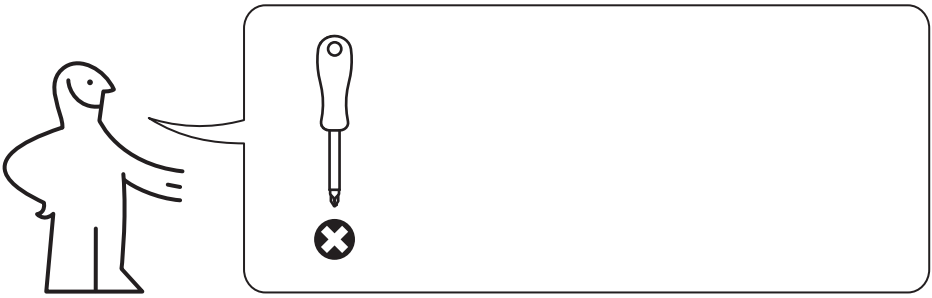

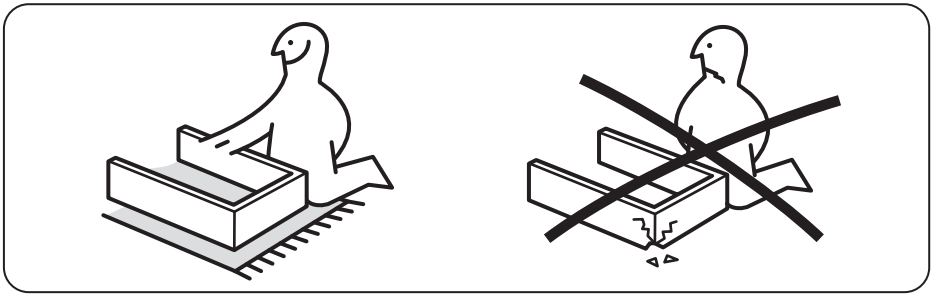

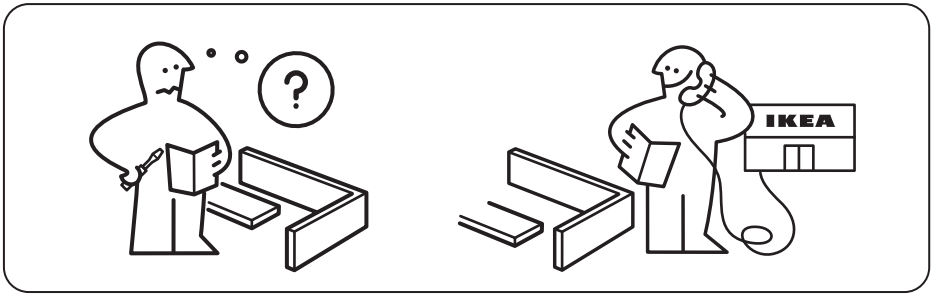

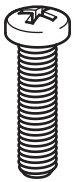

8x

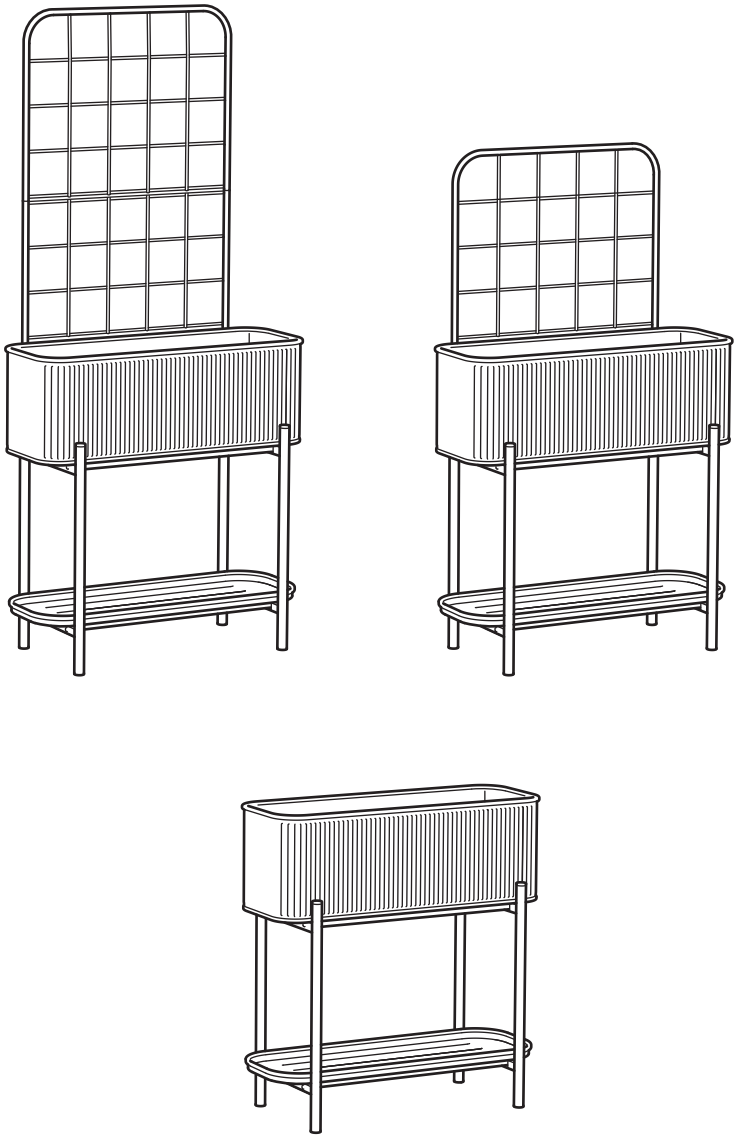

1

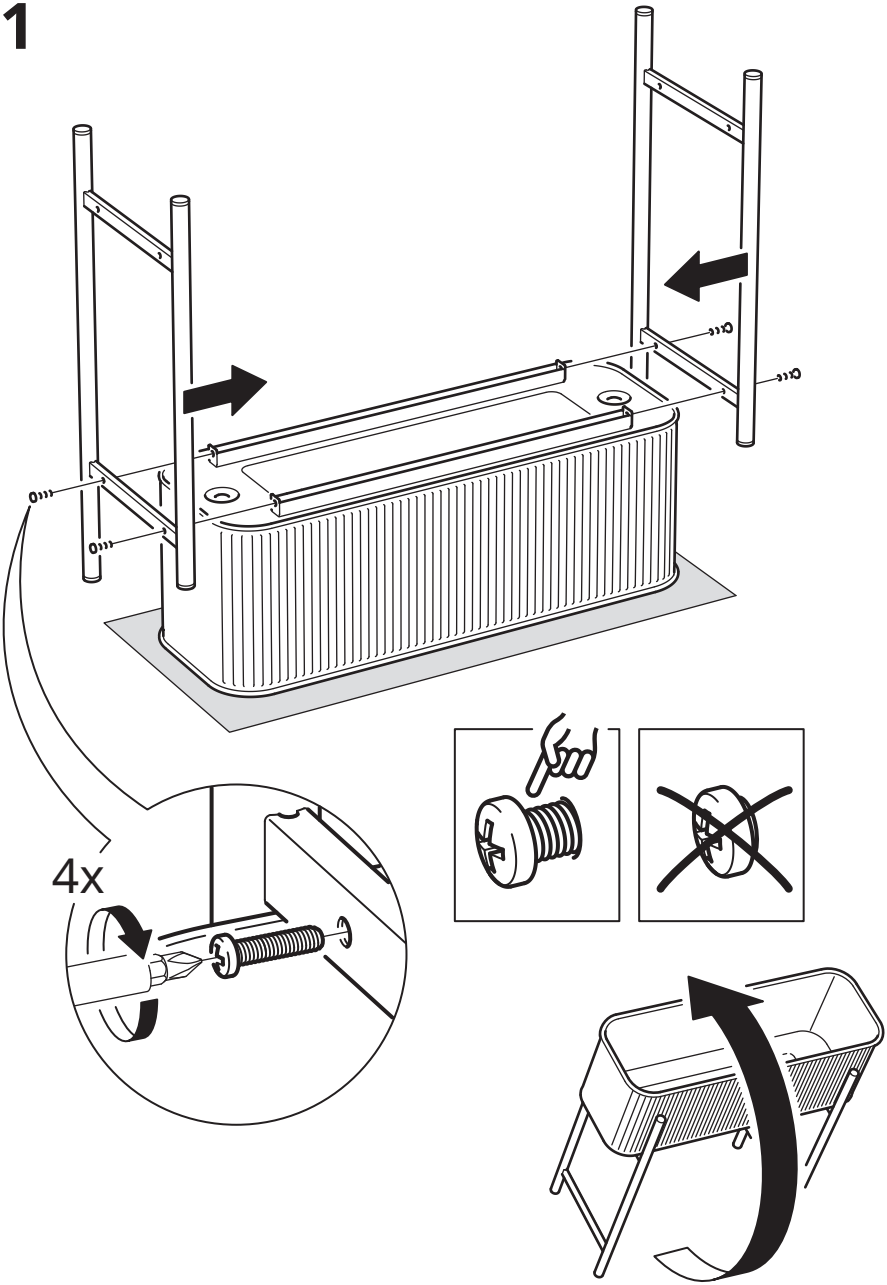

2

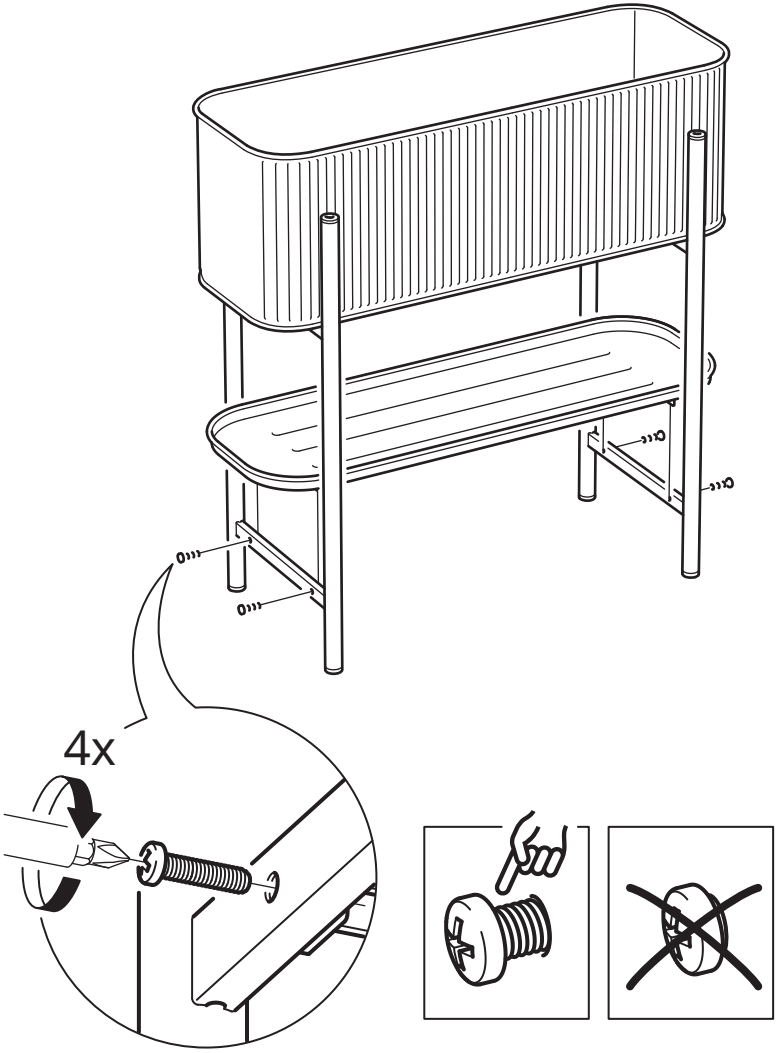

3

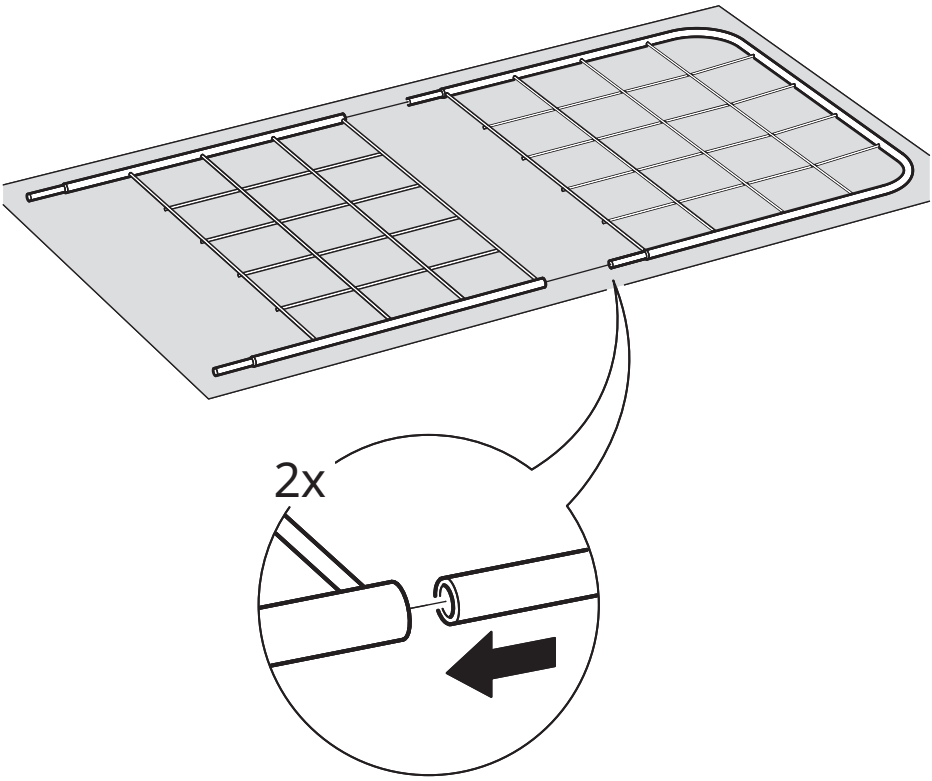

4

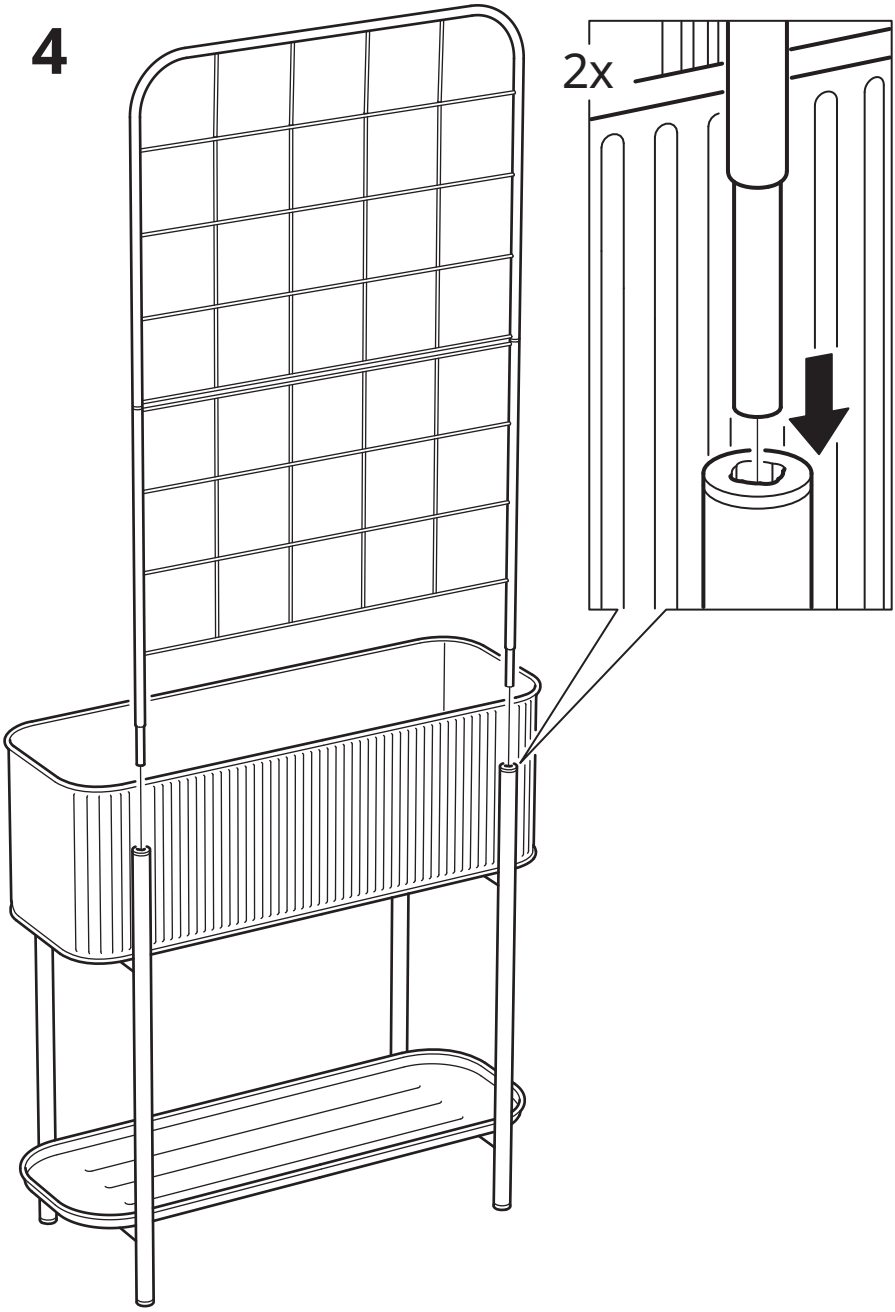

5

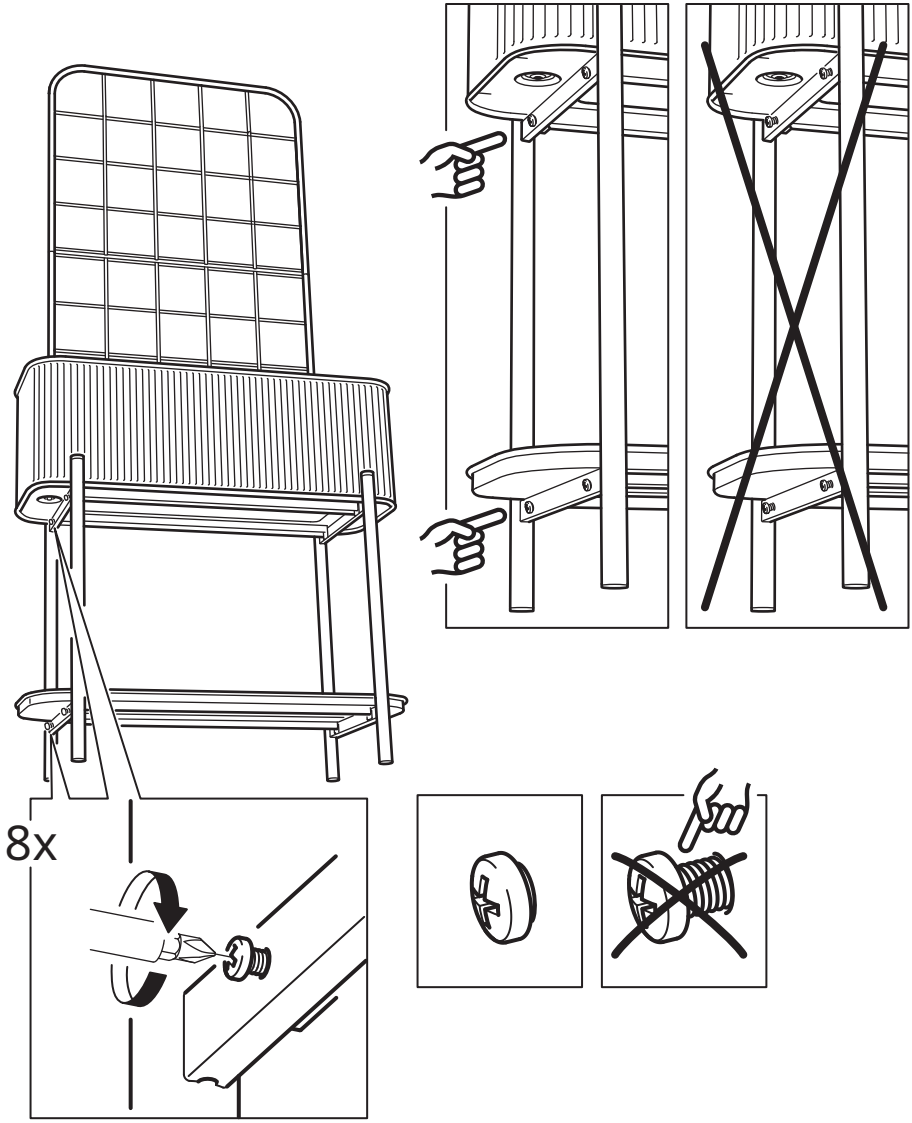

© Inter IKEA Systems B.V. 2026