HALLESKÄR

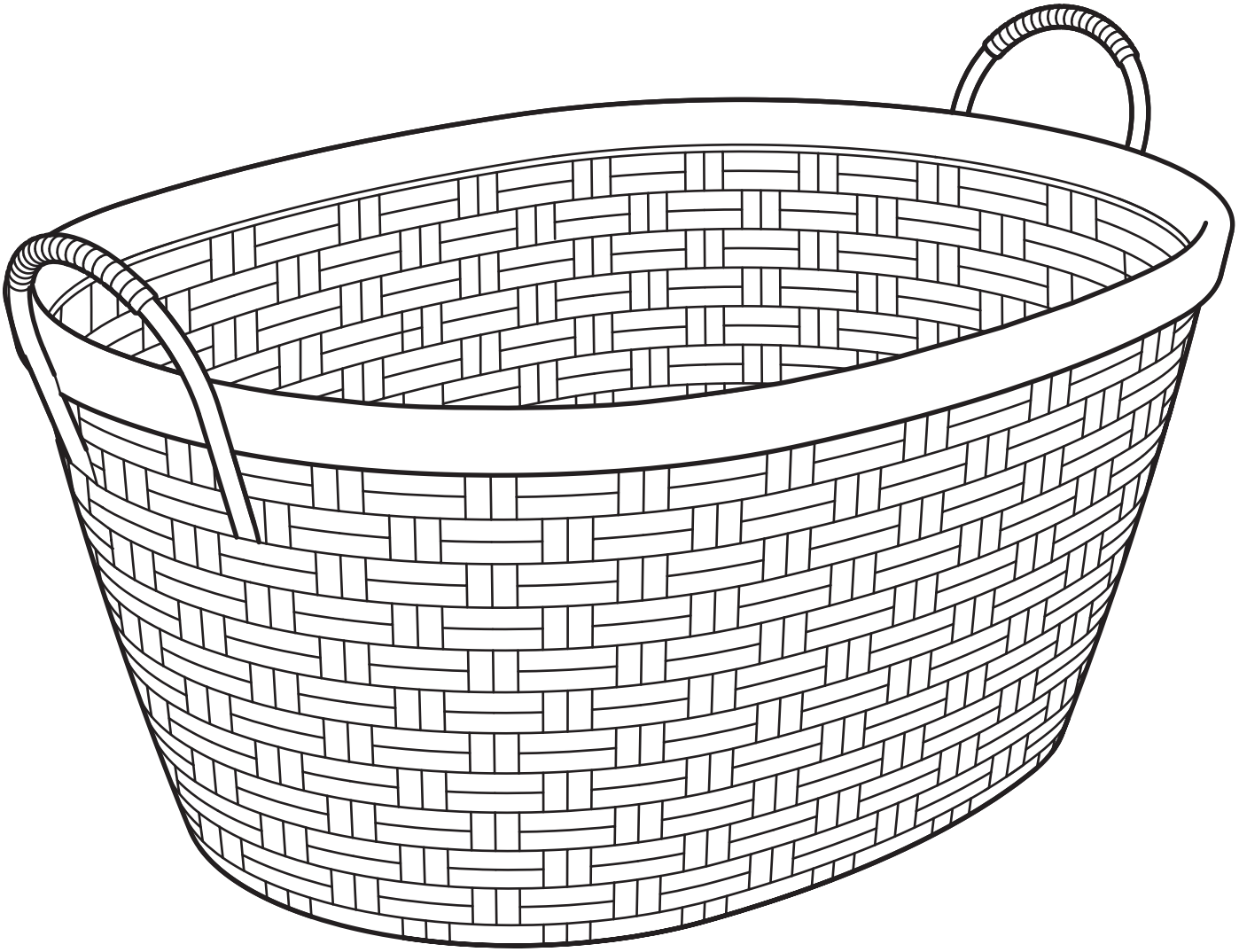

Design and Quality
IKEA of Sweden

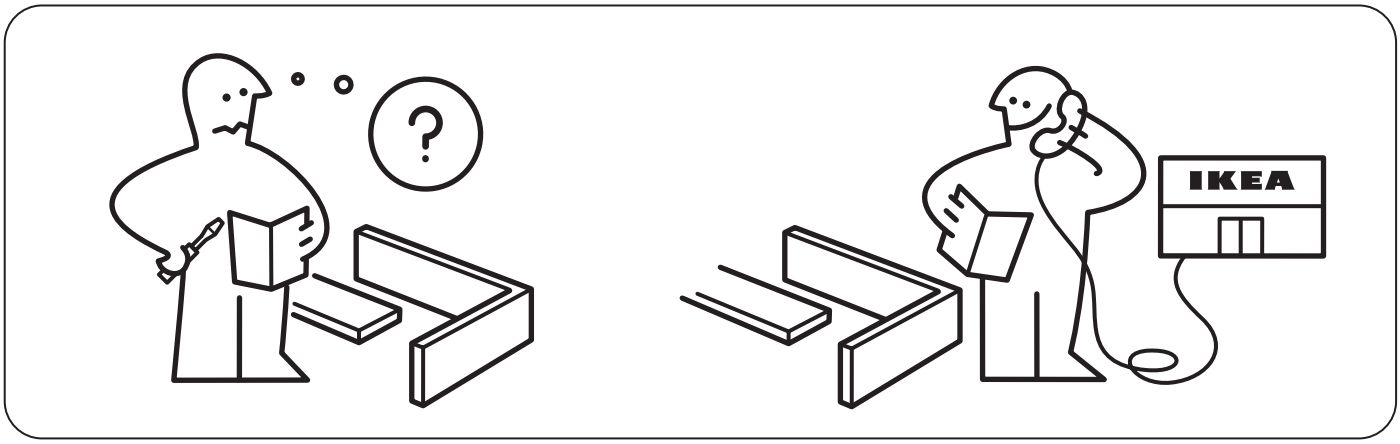

1

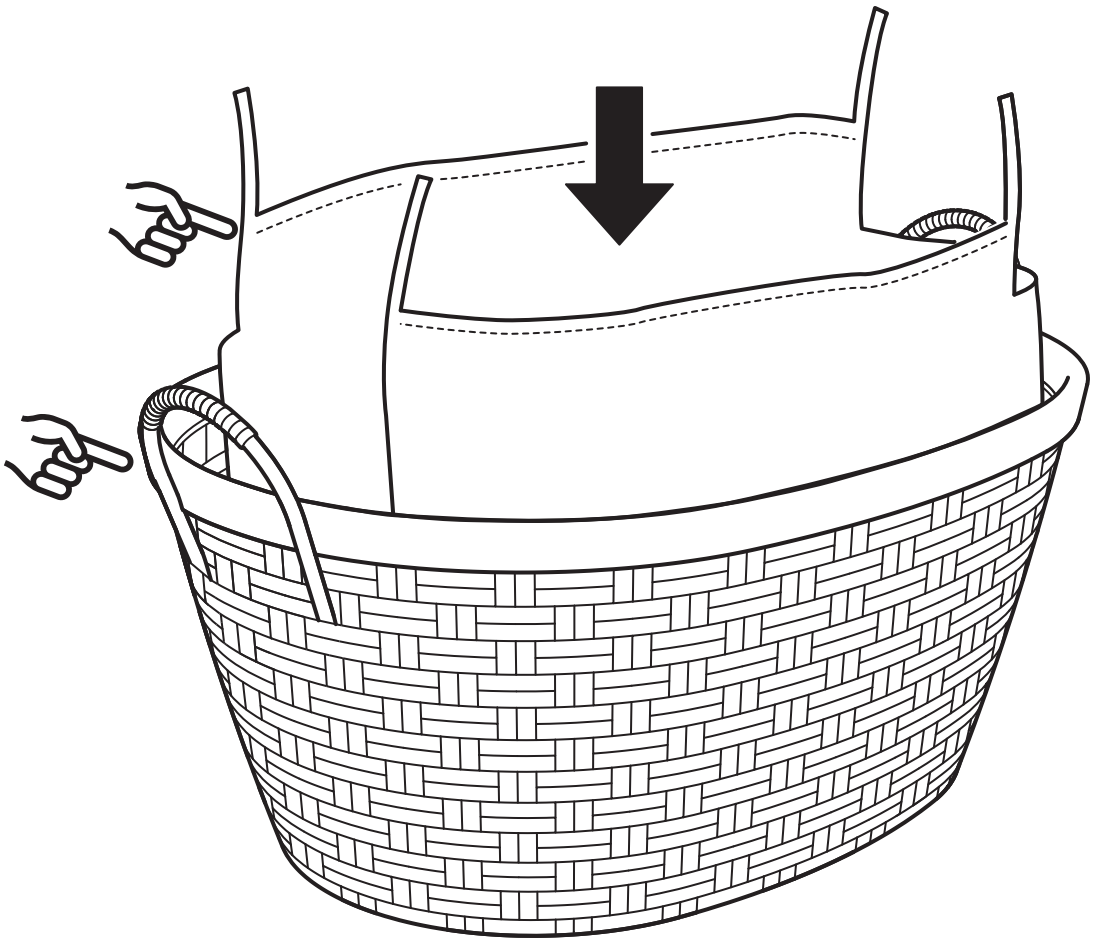

2

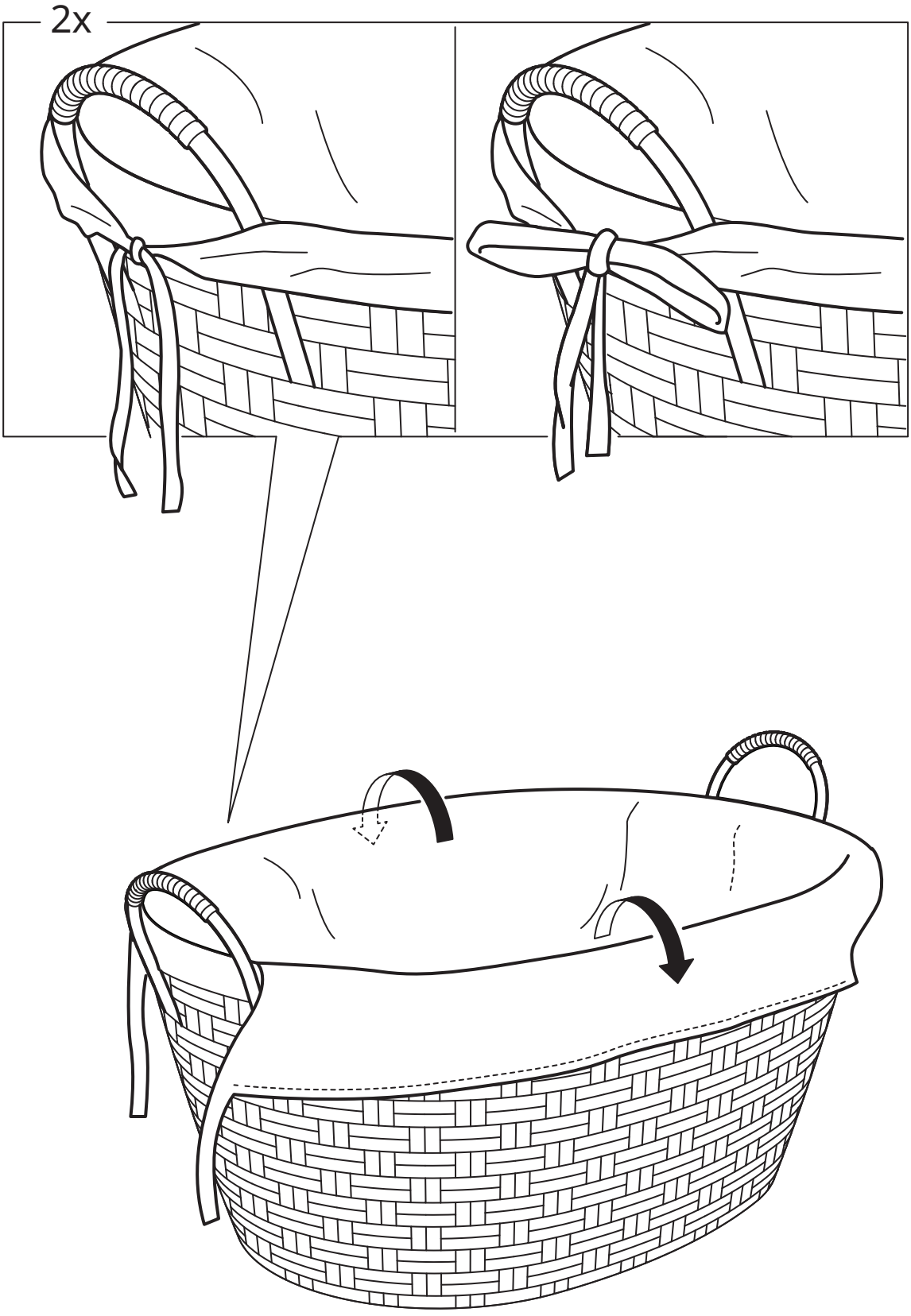

© Inter IKEA Systems B.V. 2026
2026-01-12 AA-2693042-1