LÅDMAKARE

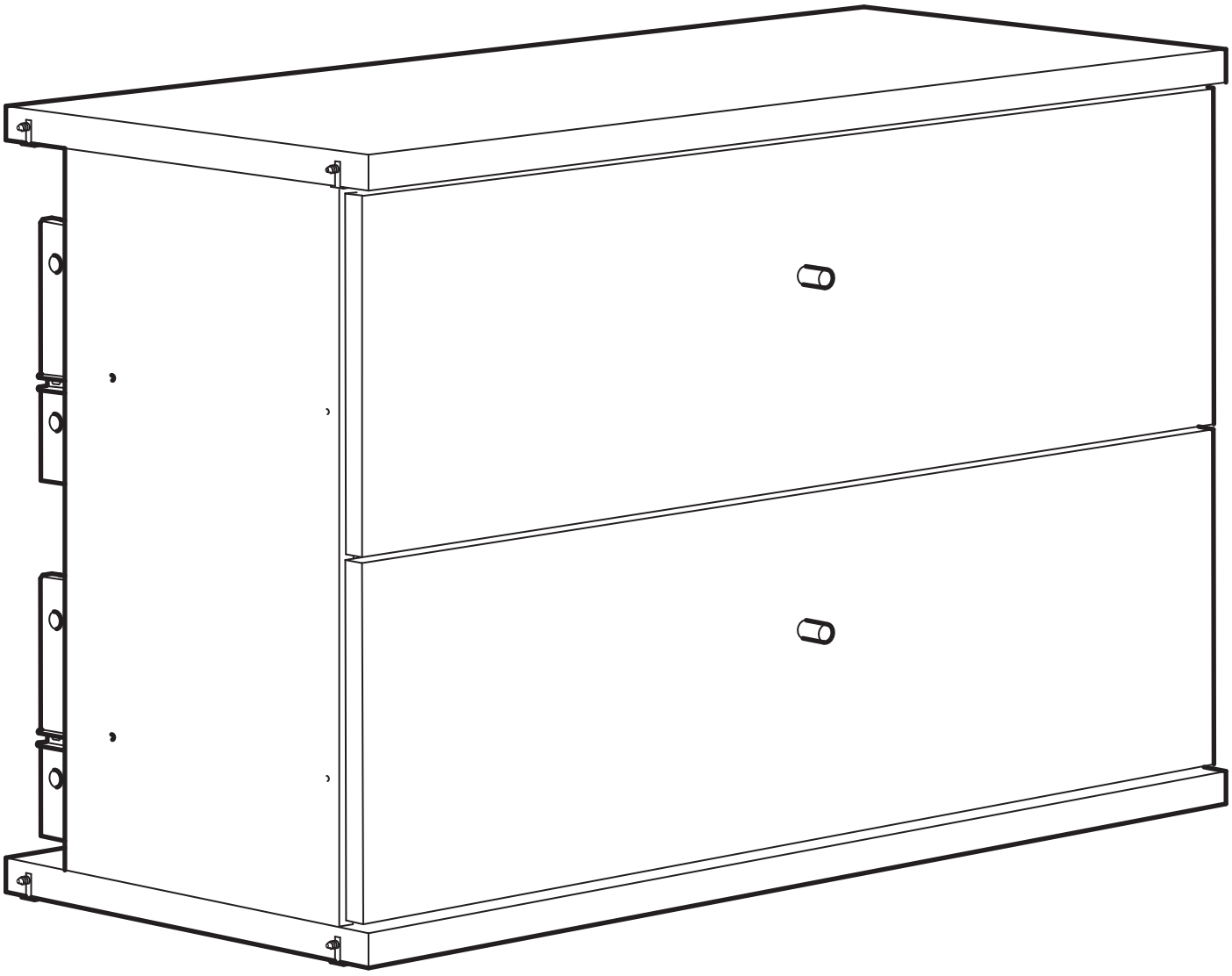

Design and Quality
IKEA of Sweden

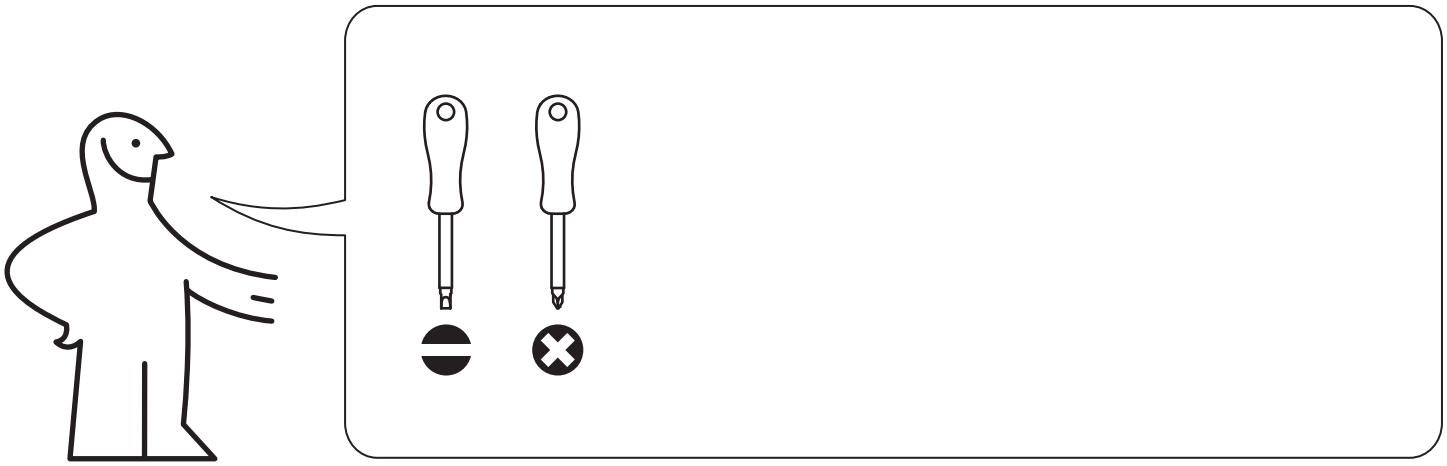

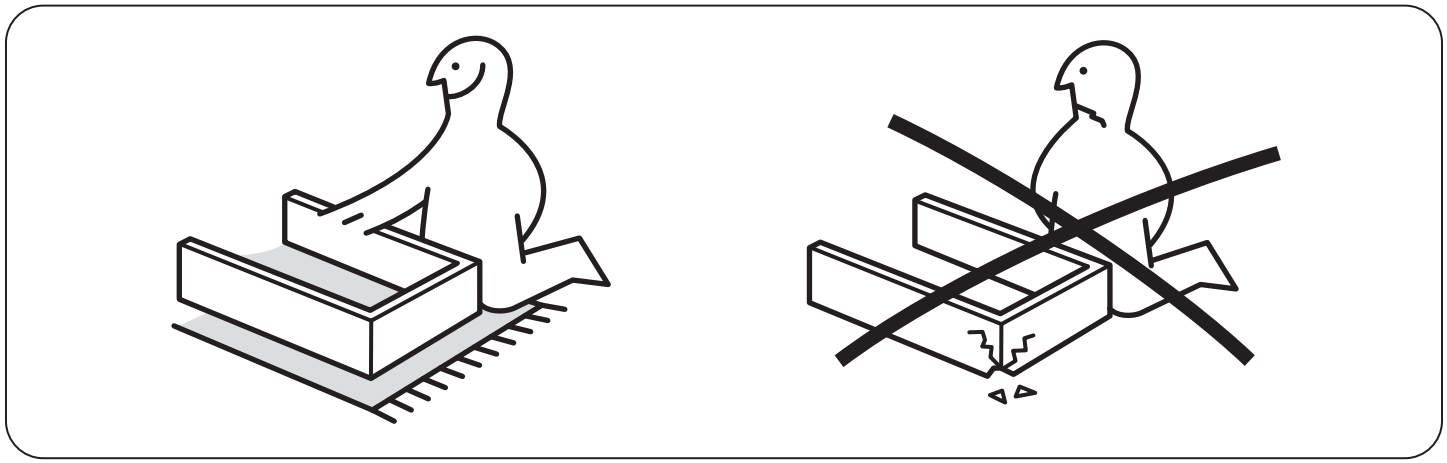

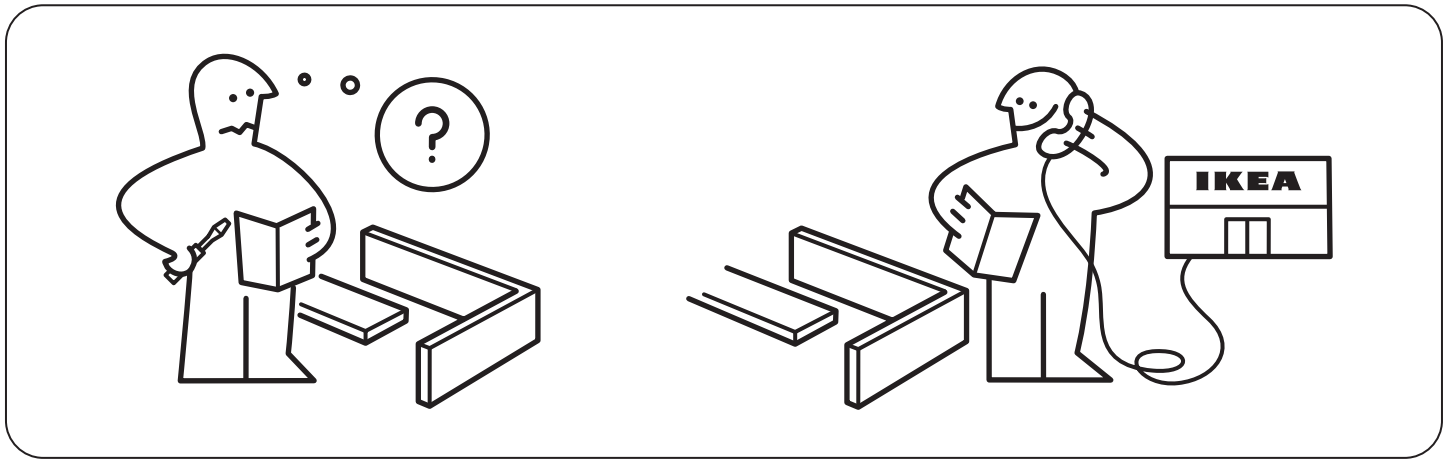



https://manuals.ikea.com/sv-SE/group/ladmakare-C2N7y9

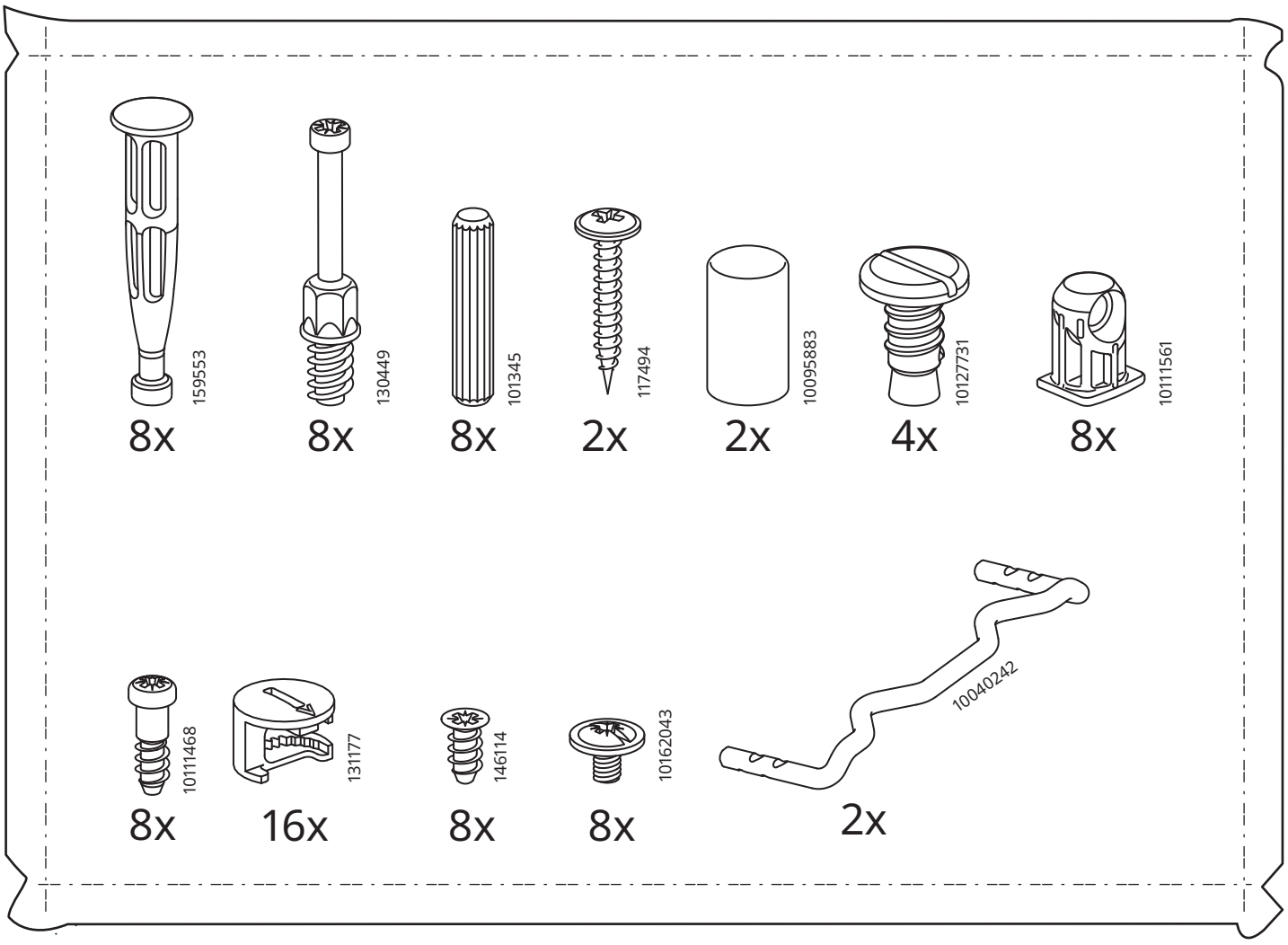
159553
8x
130449
8x
101345
8x
117494
2x
10095883
2x
10127731
4x
10111561
8x
10111468
8x
131177
16x
146114
8x
10162043
8x
10040242
2x

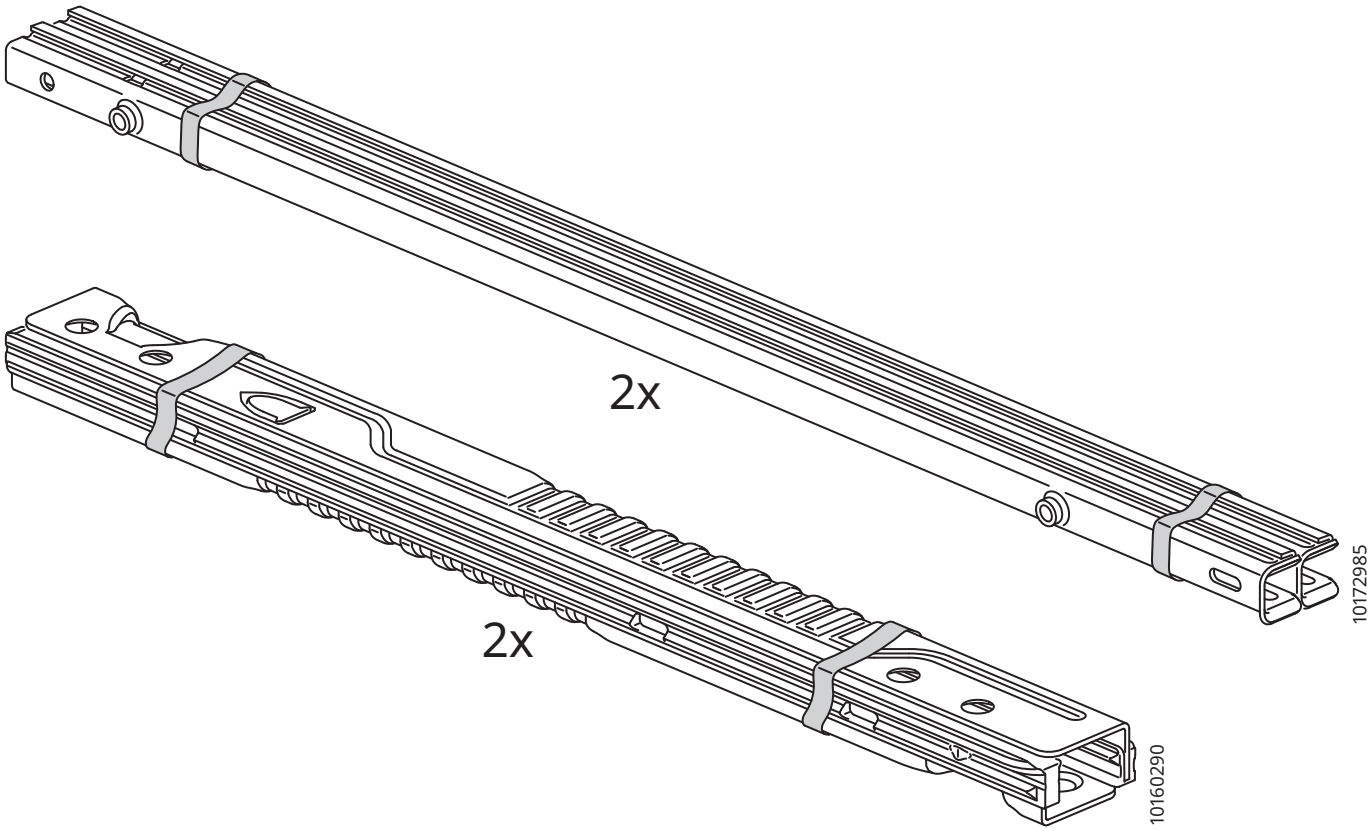
2x
10172985
2x
10160290

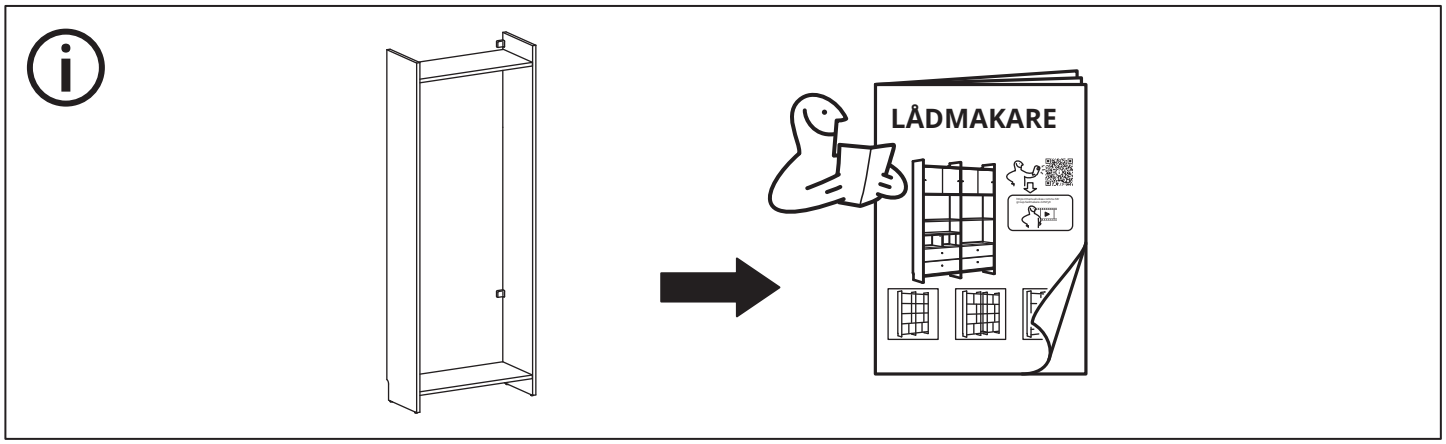

1

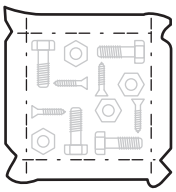

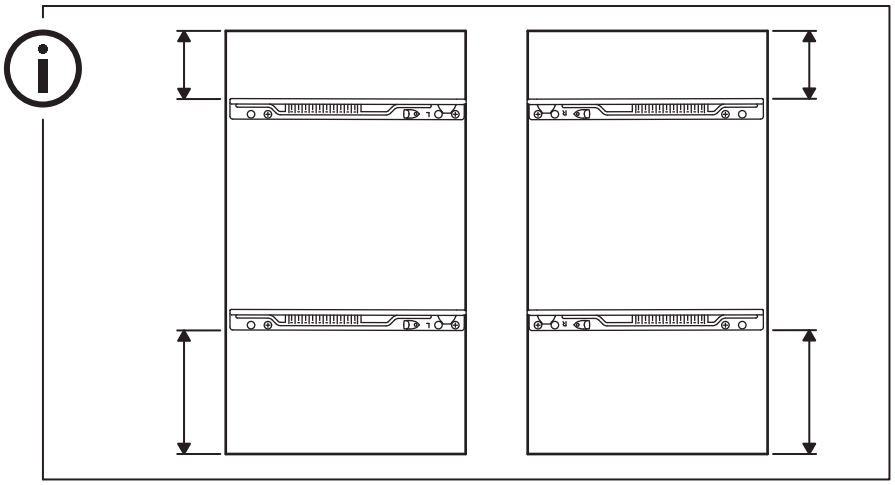

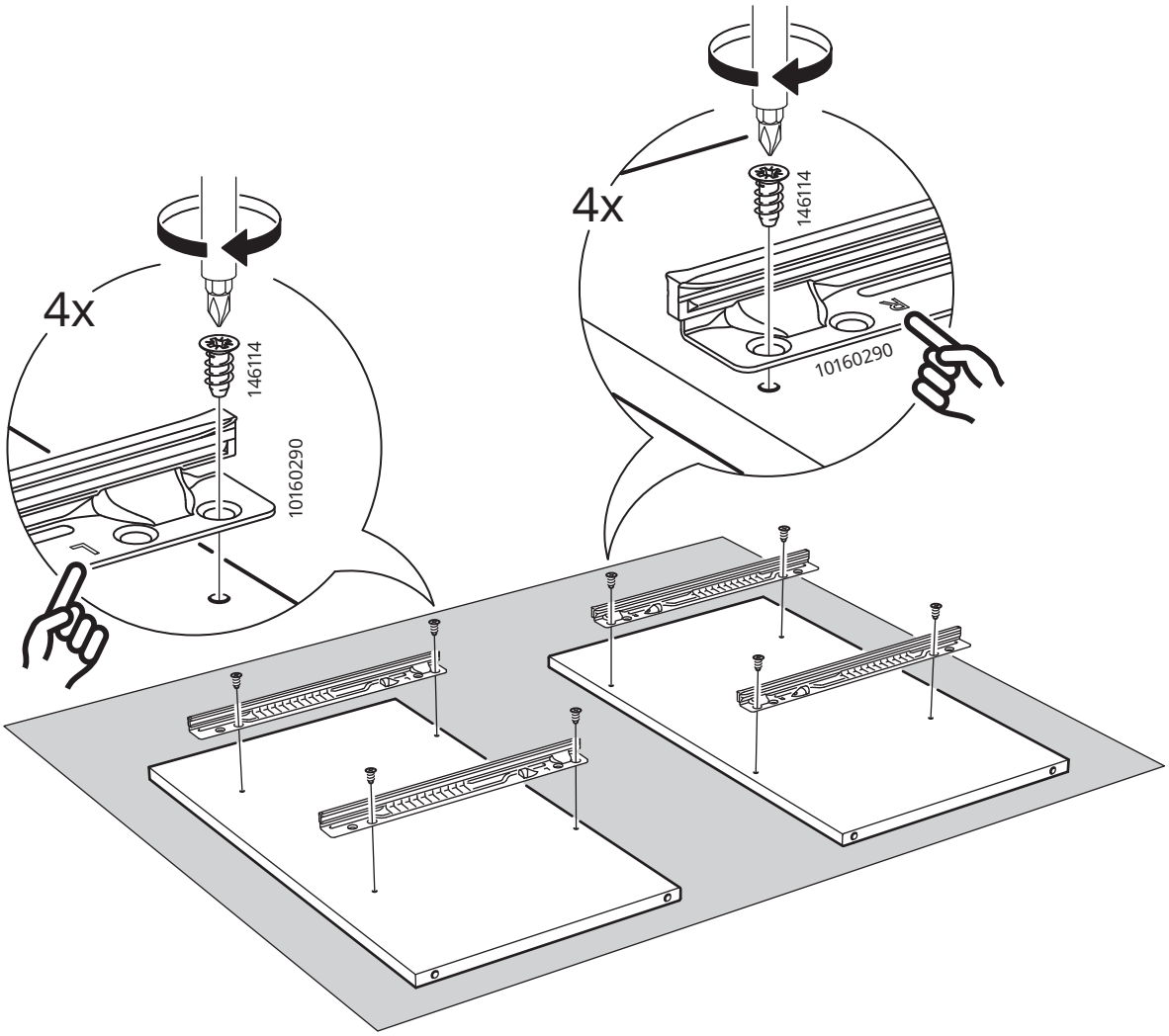

2

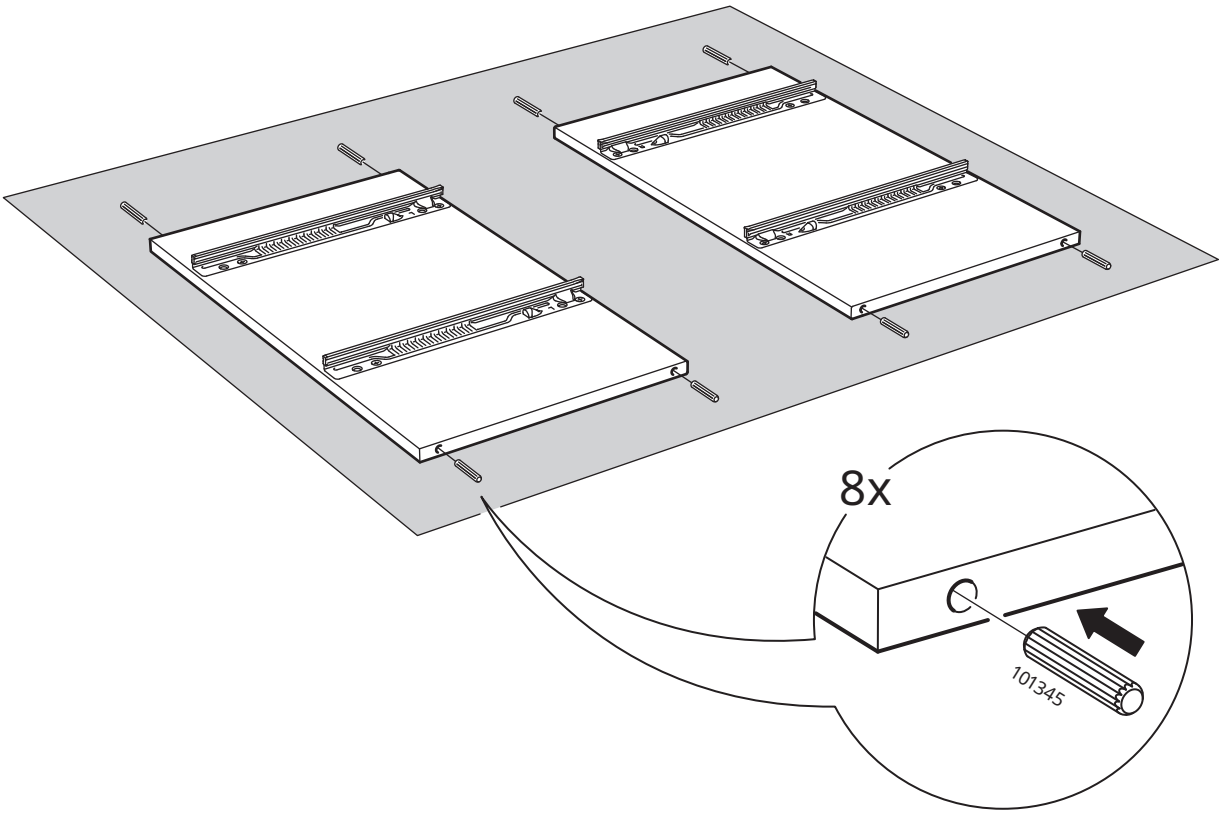

3

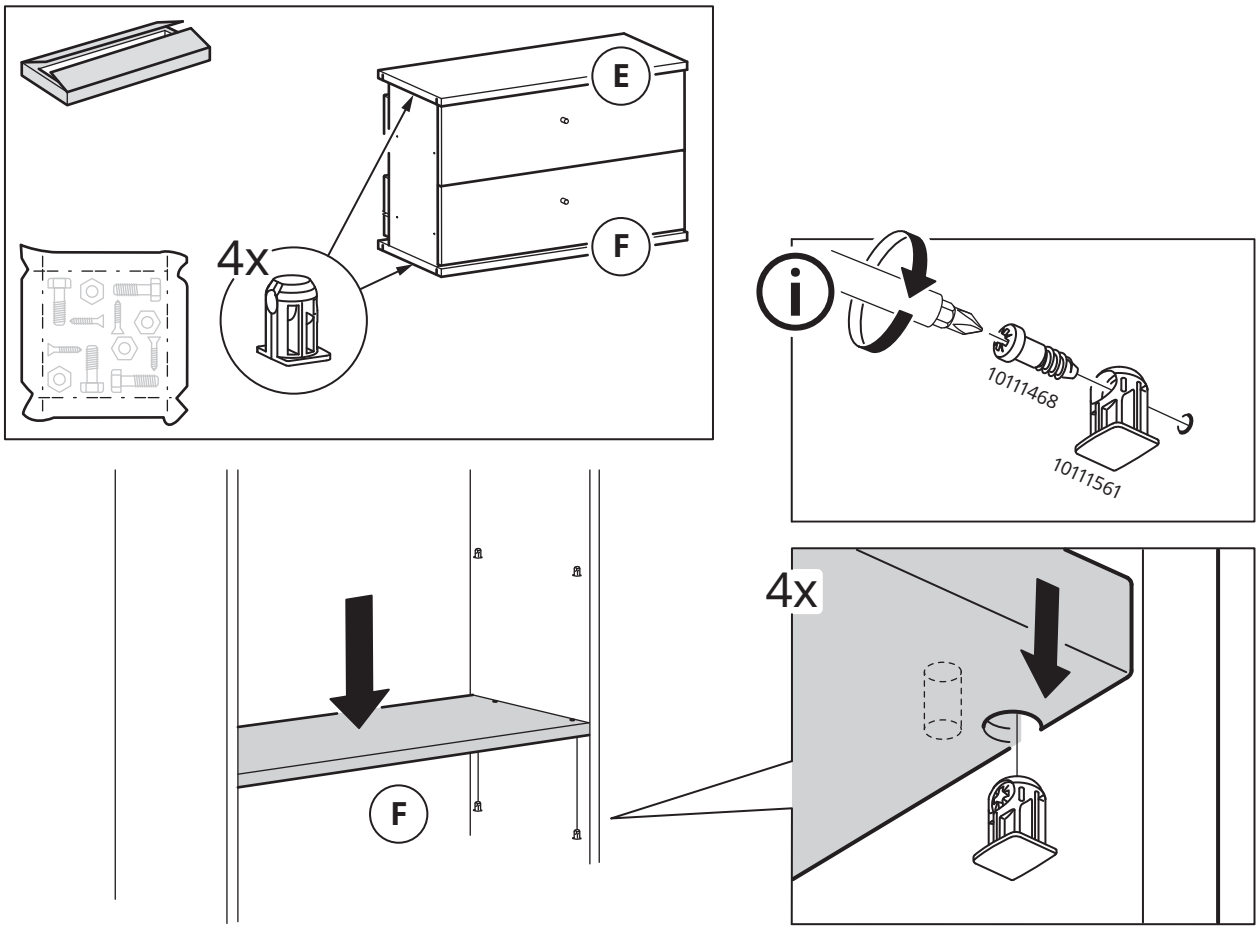

4

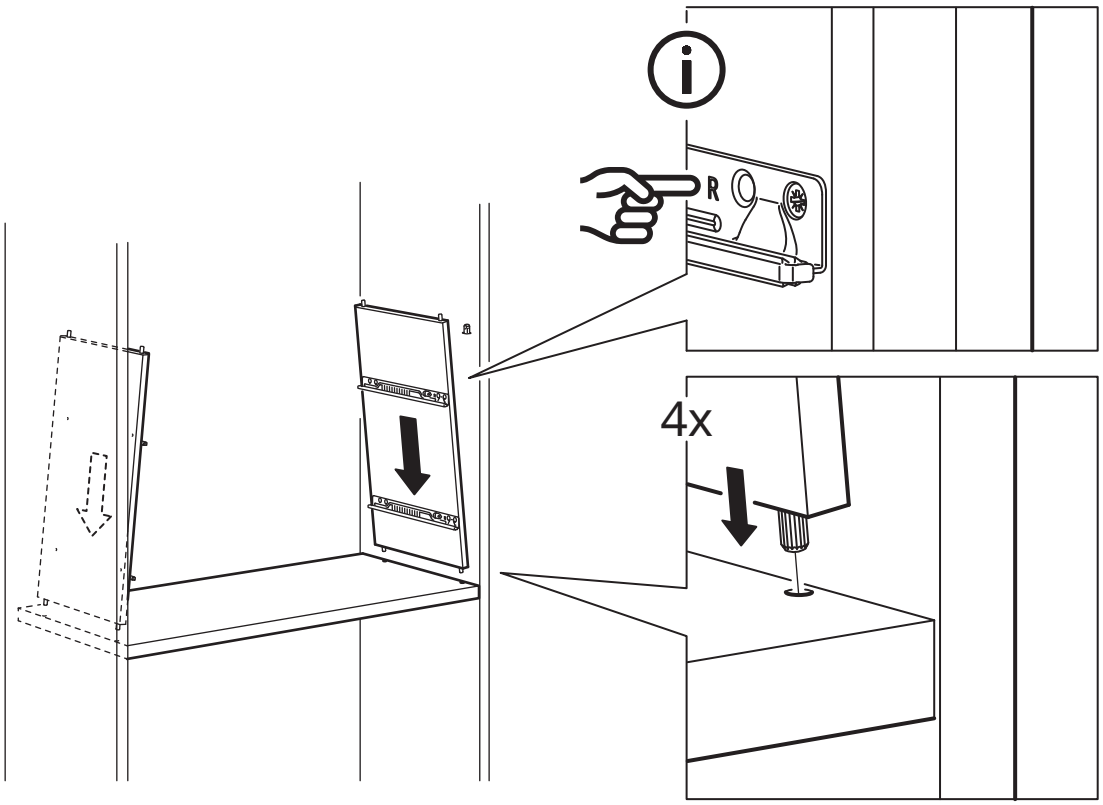

5

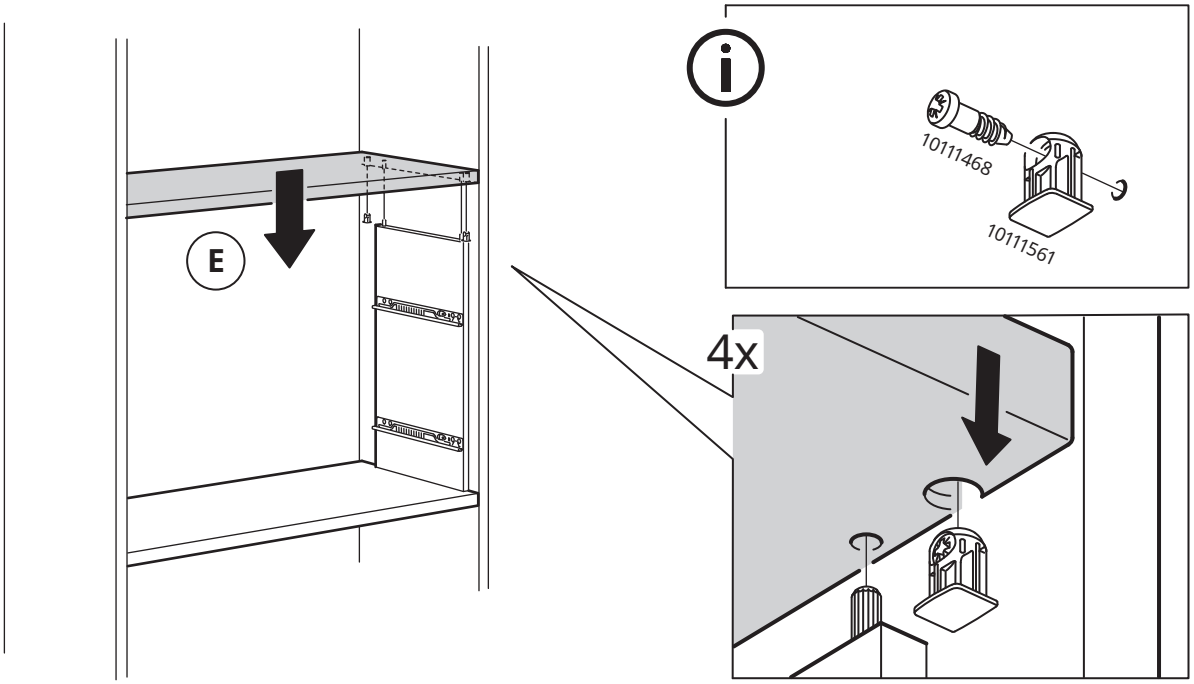

6

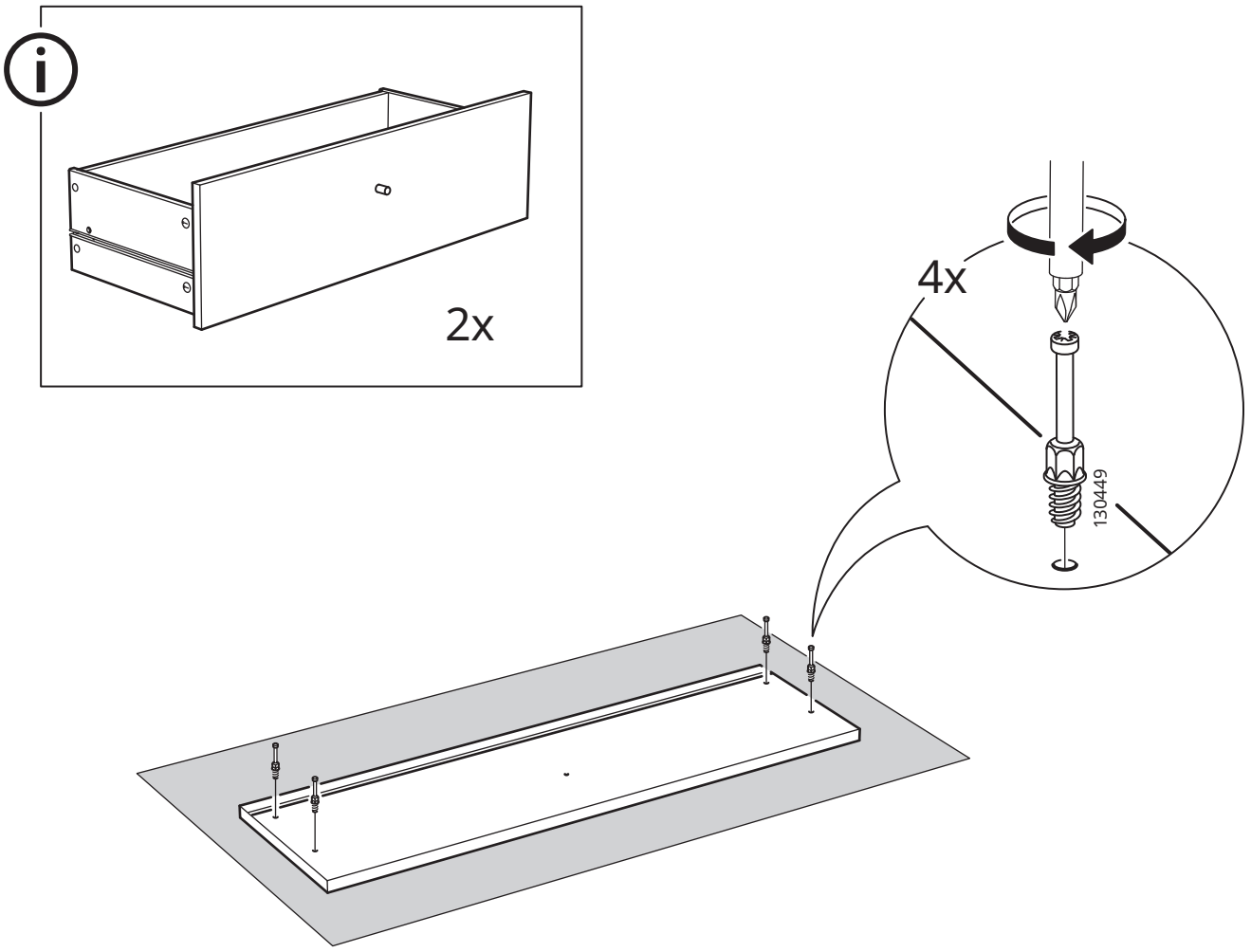

7

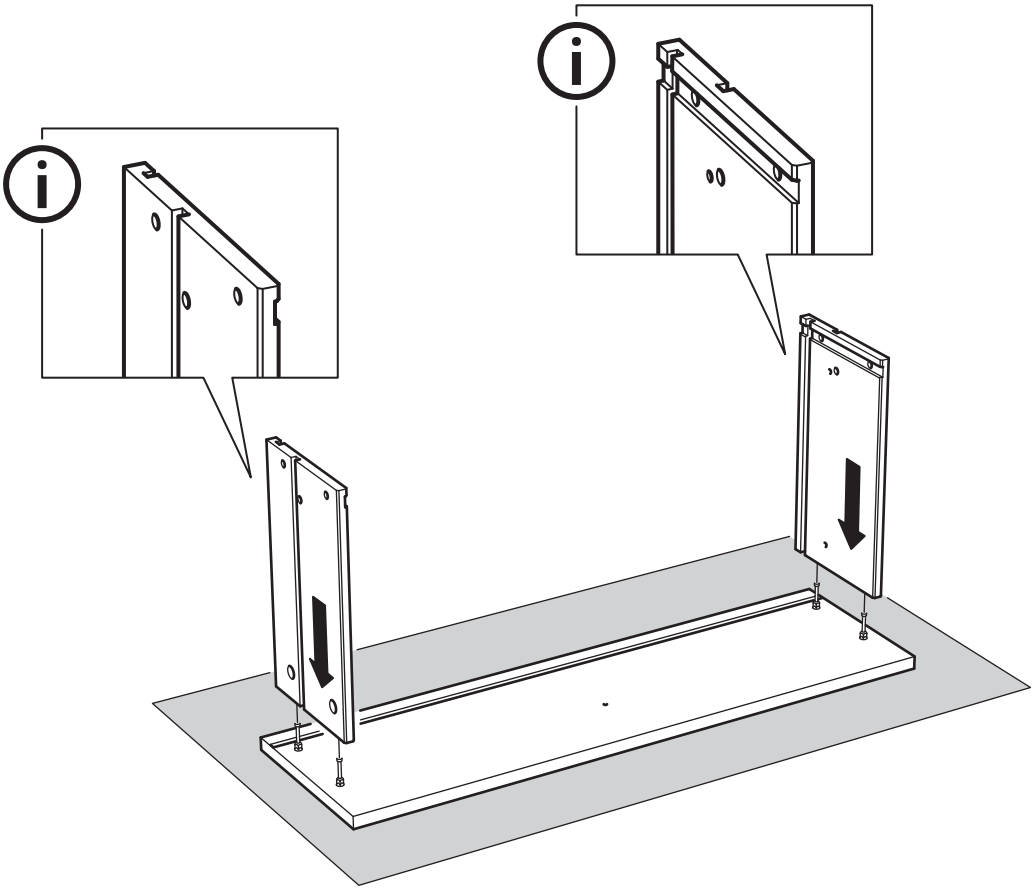

8

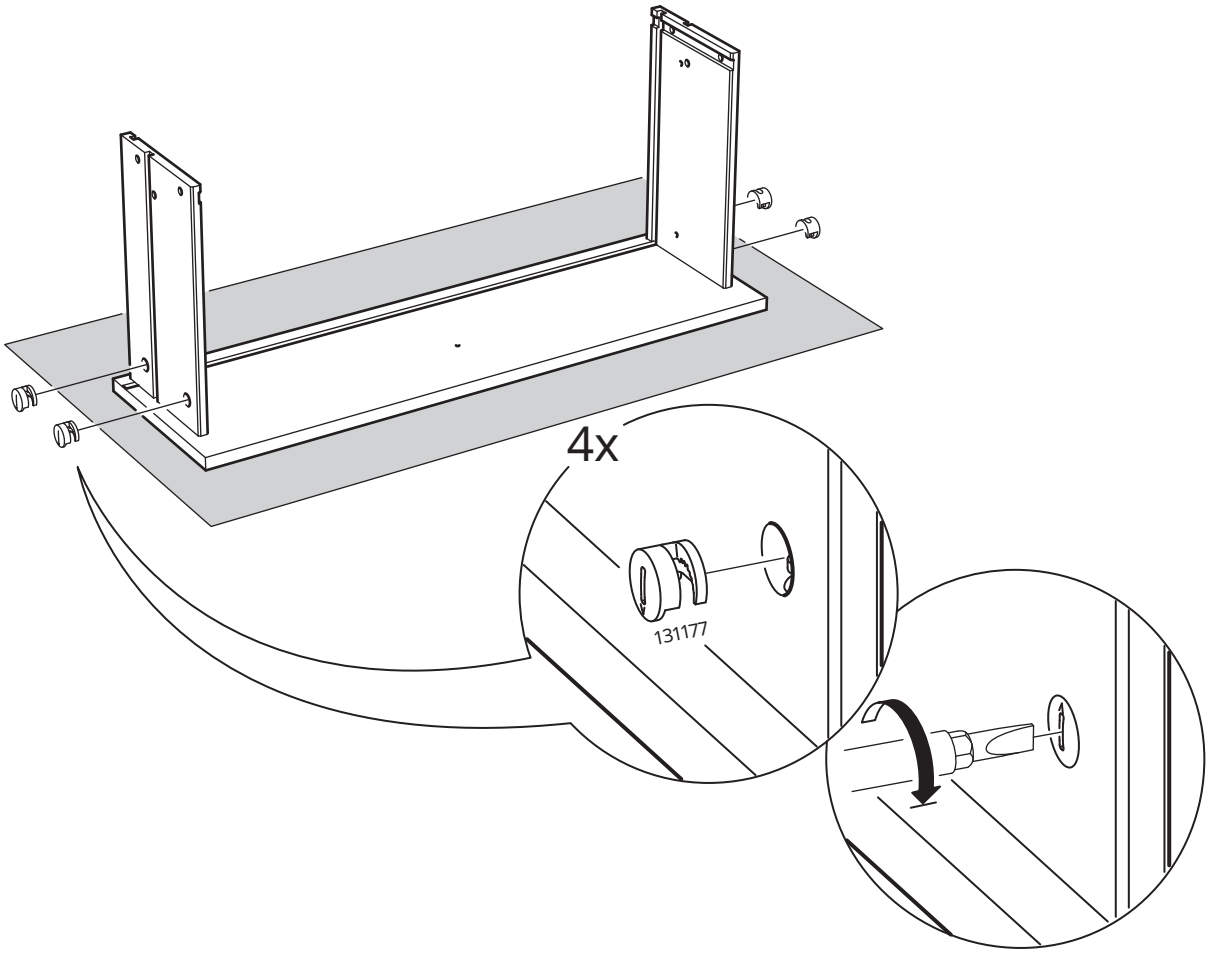

9

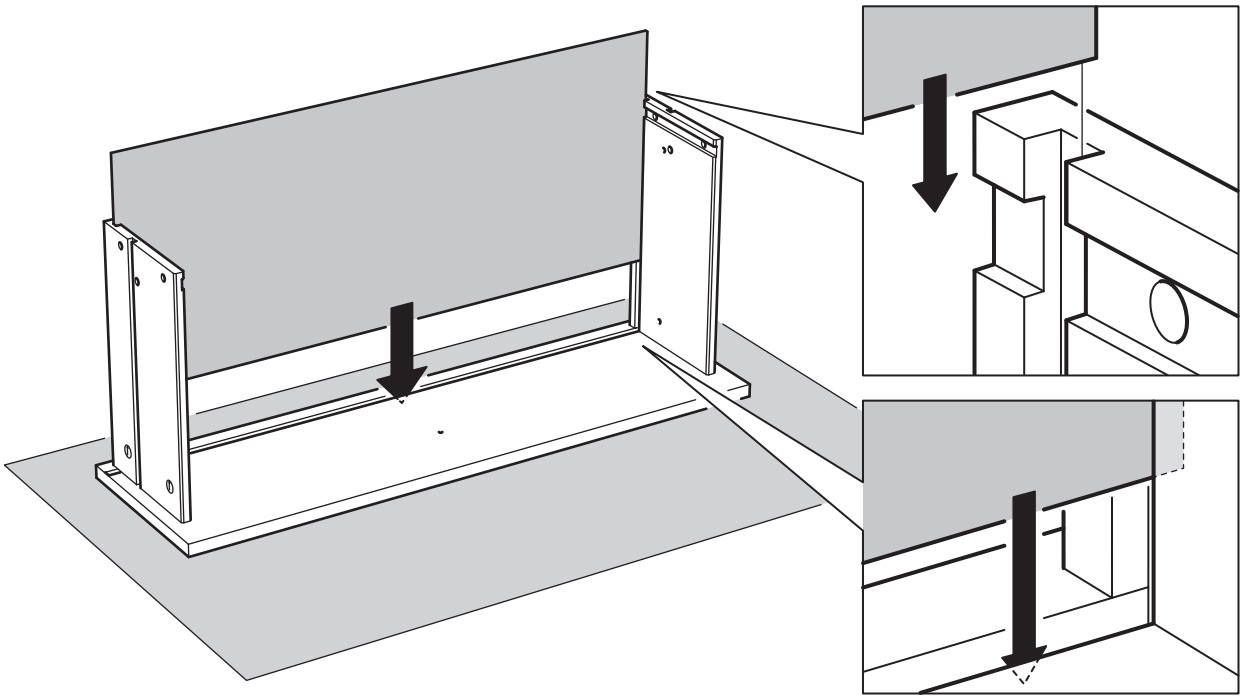

10

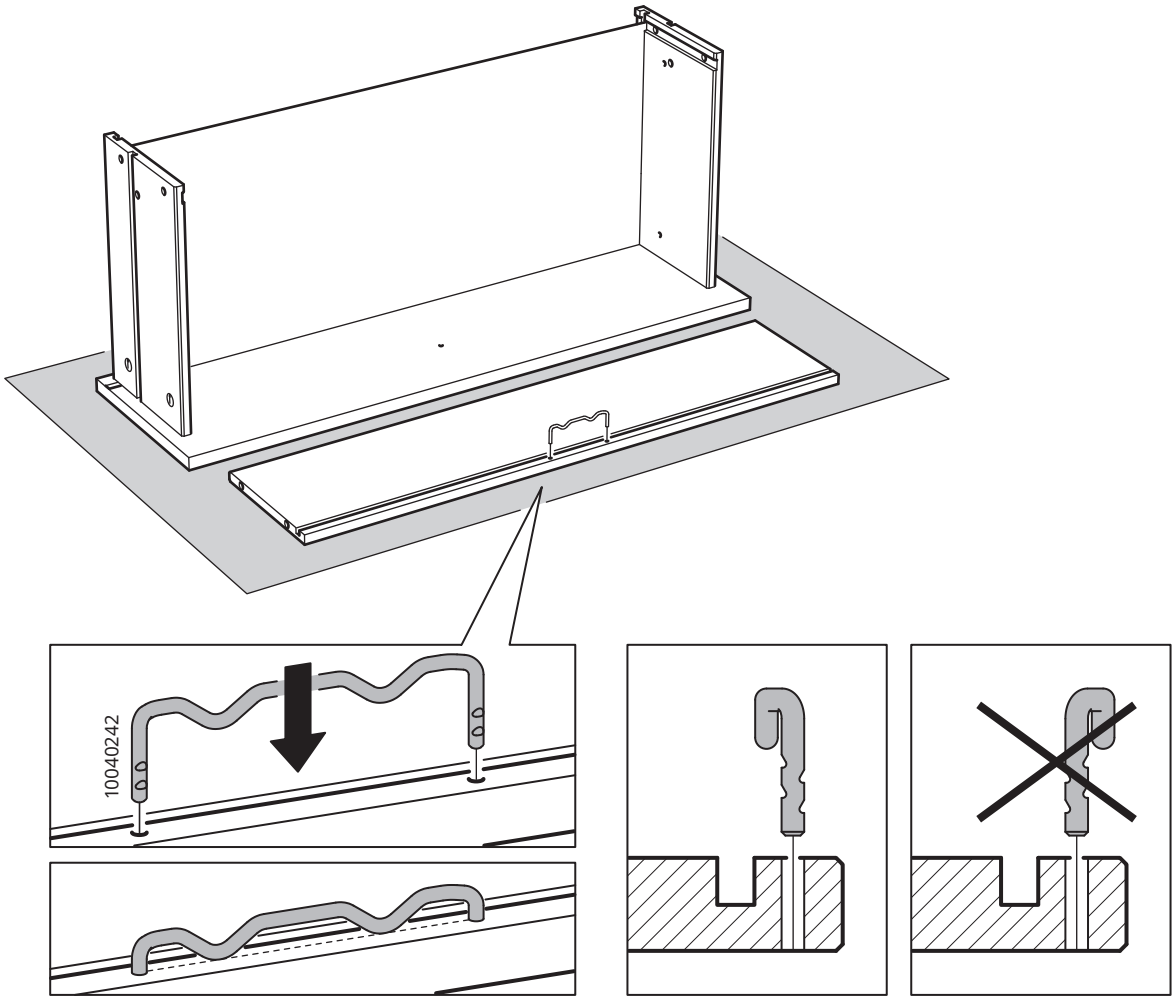

11

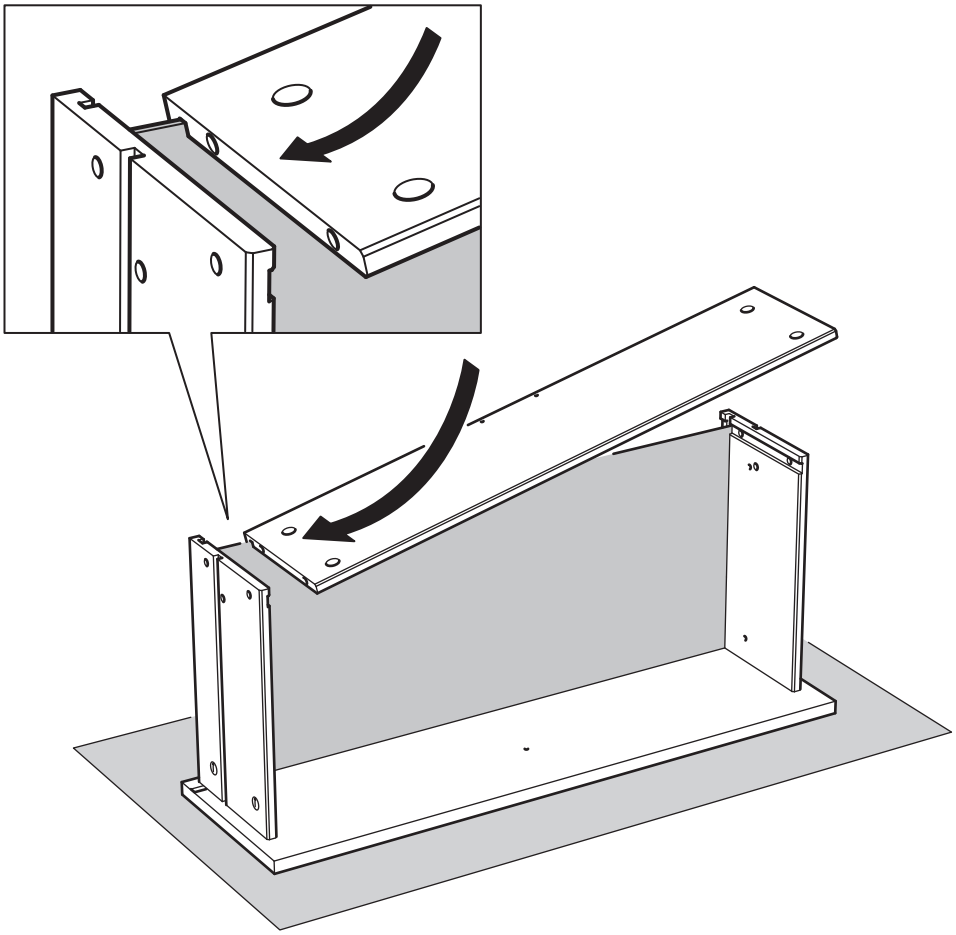

12

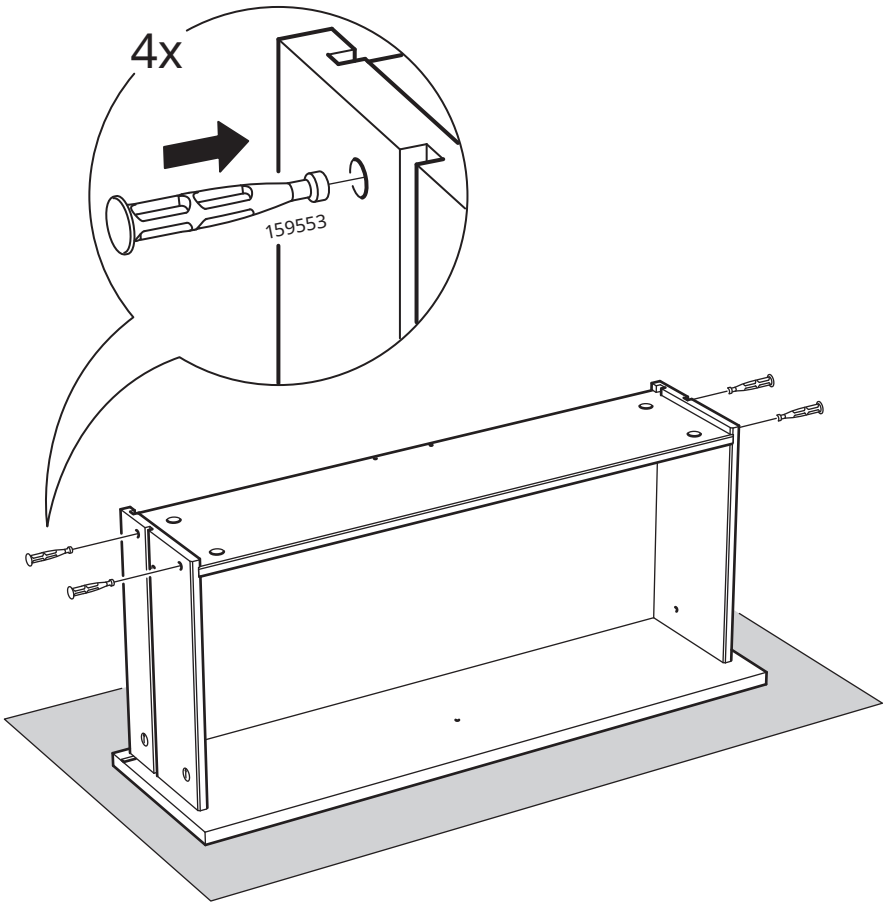

13

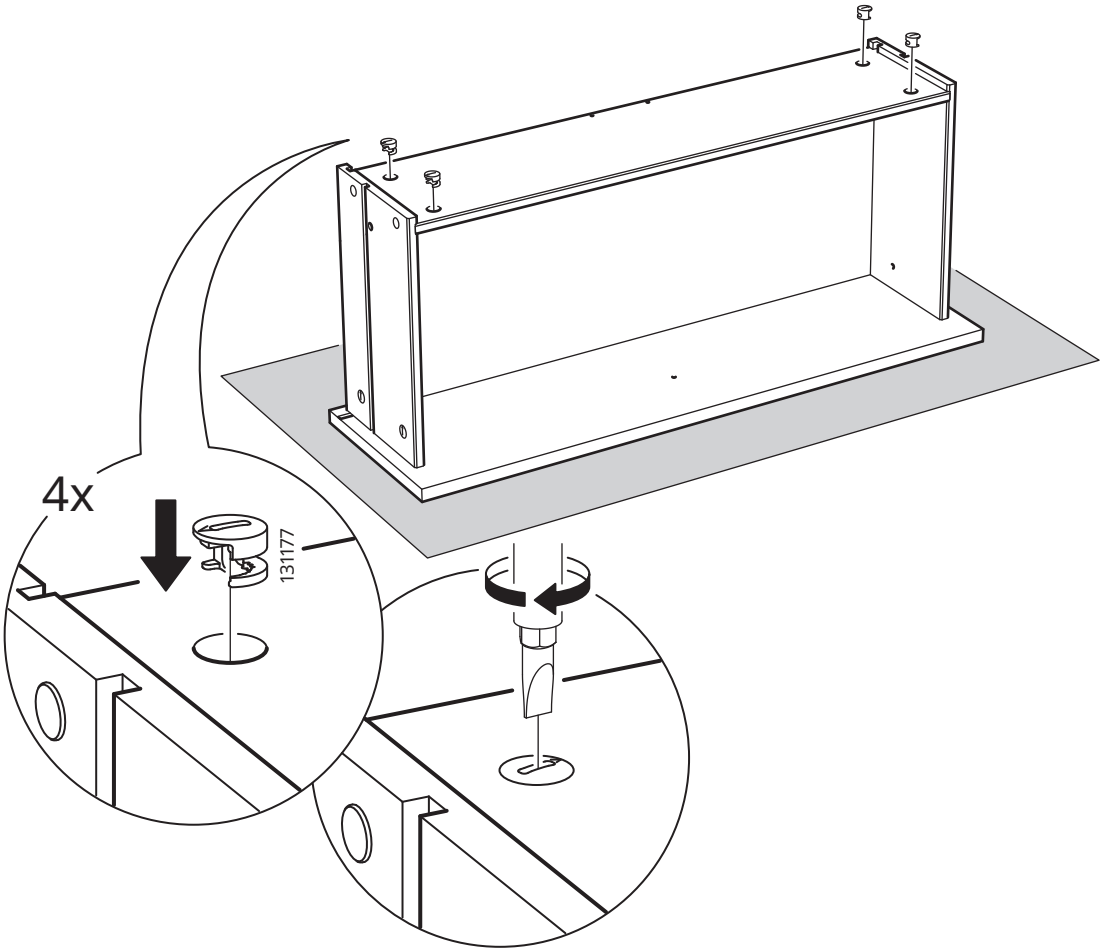

14

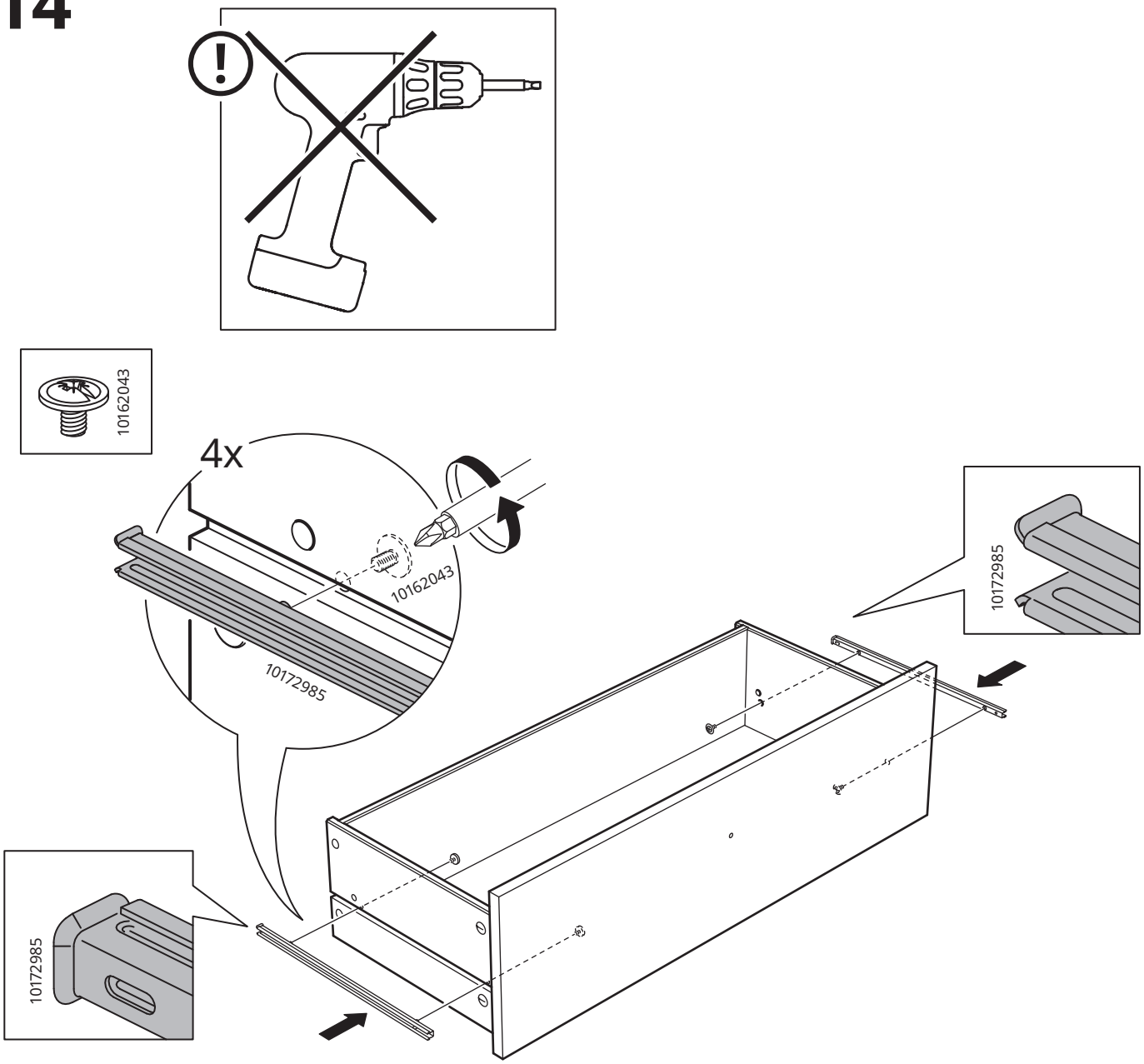

15

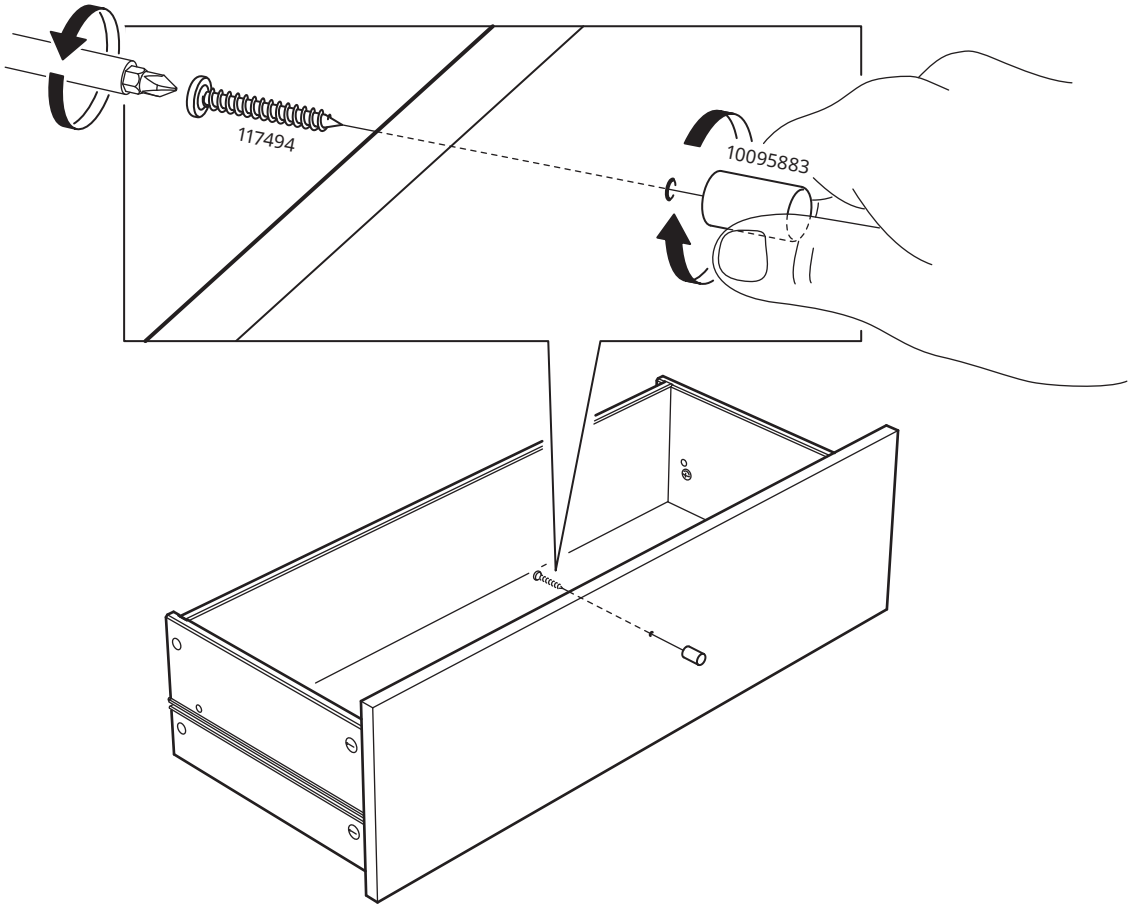

16

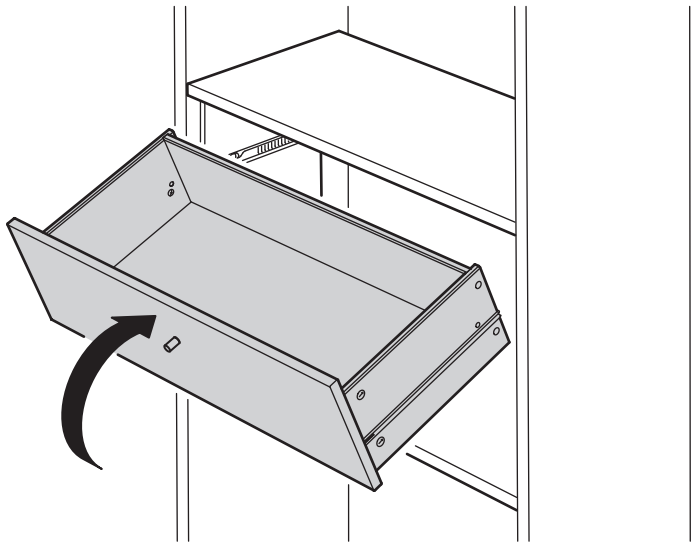

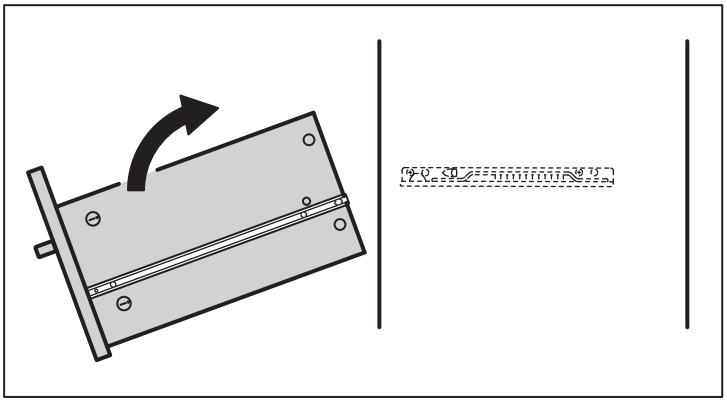

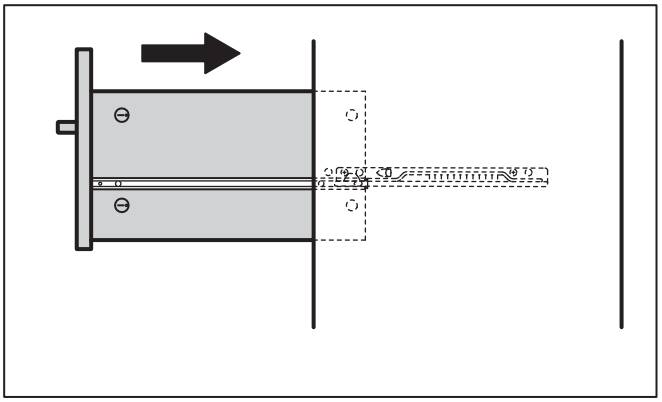

17

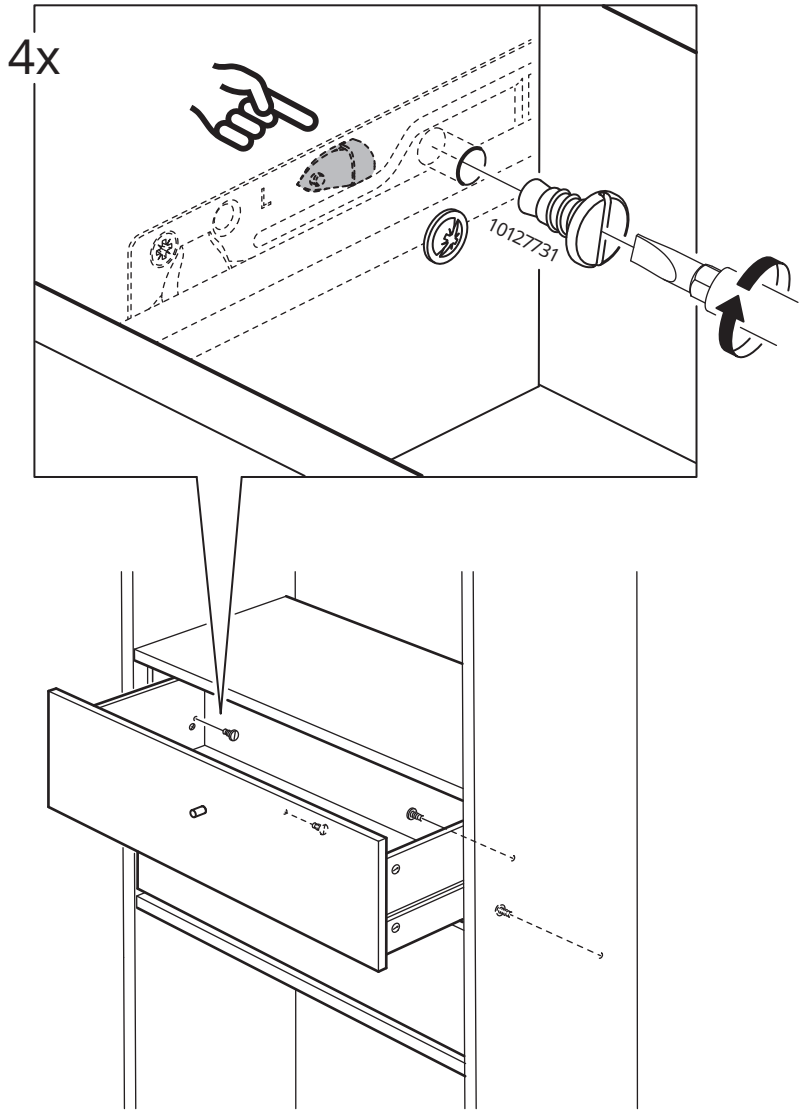

© Inter IKEA Systems B.V. 2024
2026-08-19 AA-2578199-3