MITTZON

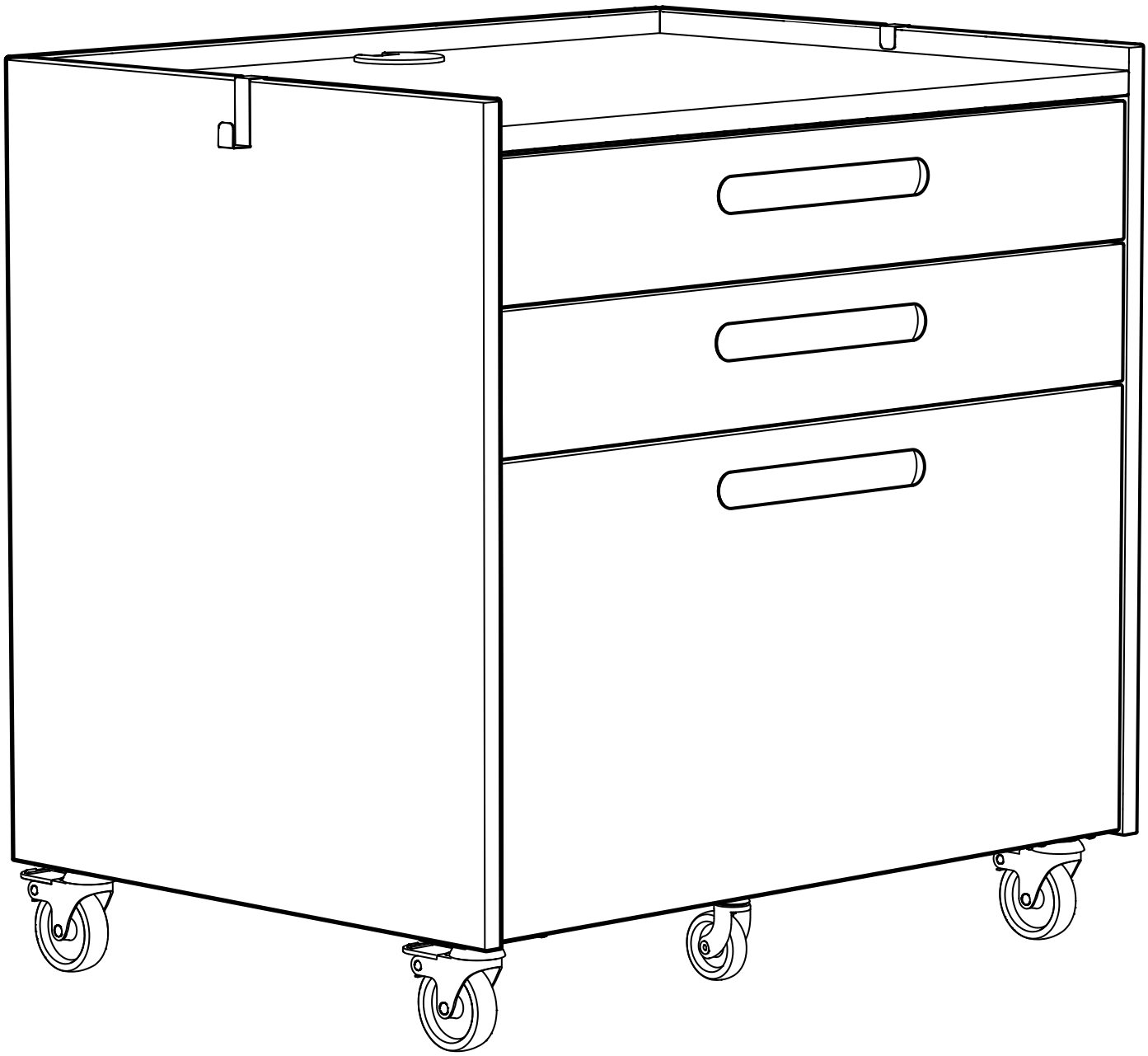

Design and Quality
IKEA of Sweden

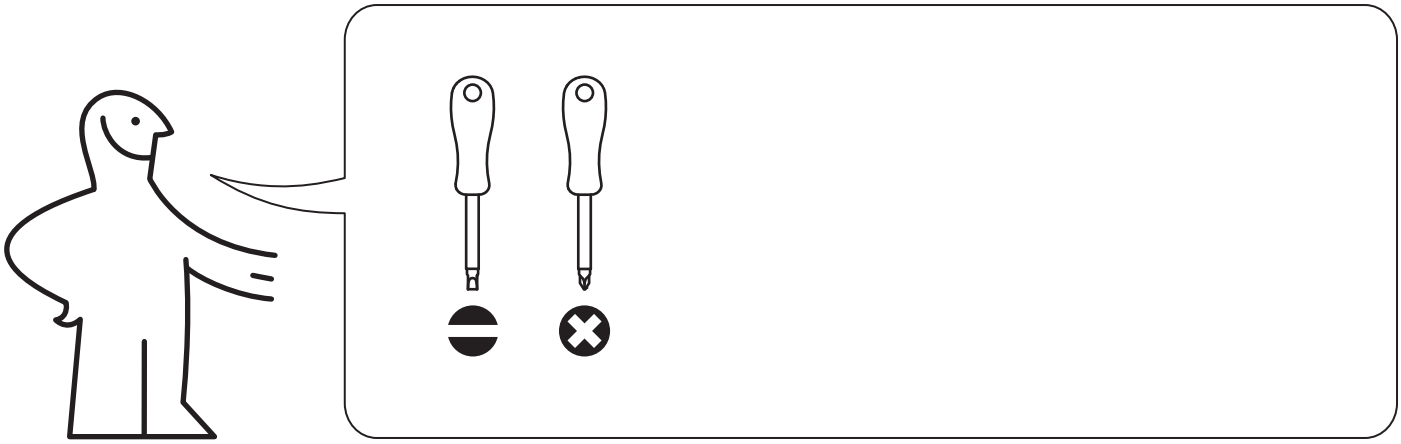

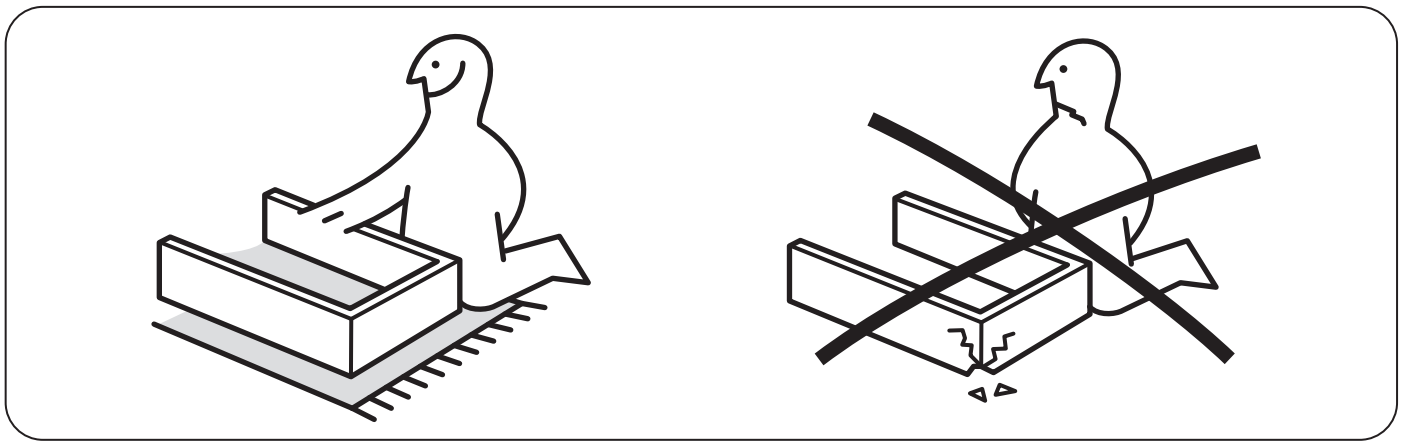

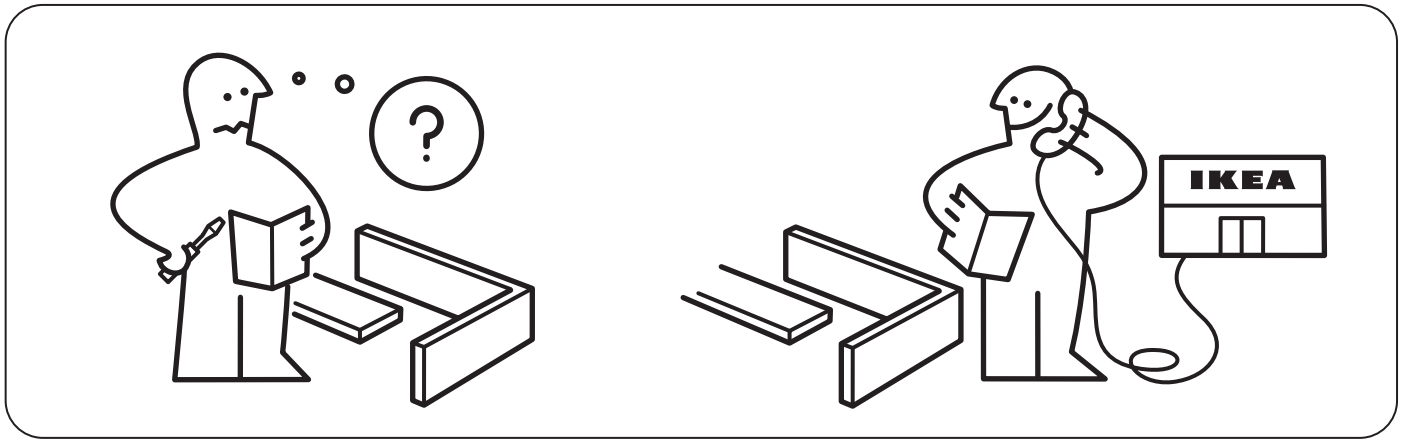
?
IKEA

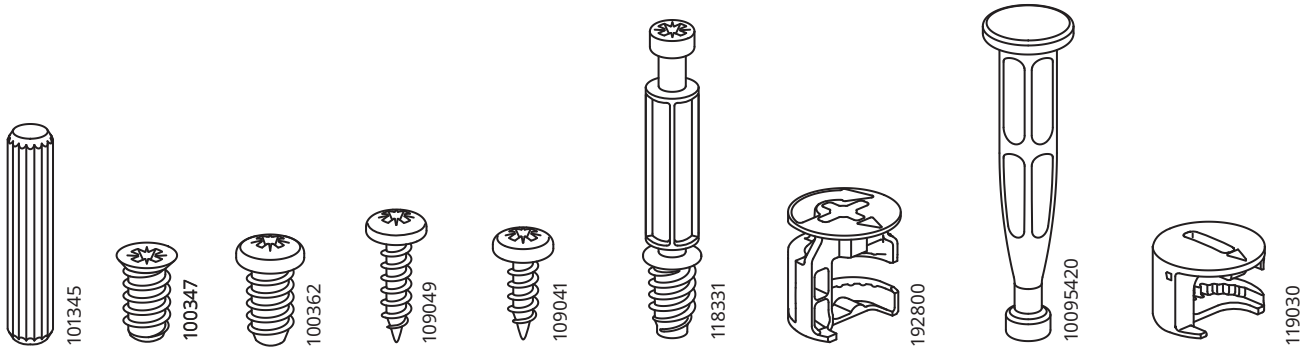

4x 16x 6x 20x 4x 4x 4x 12x 12x

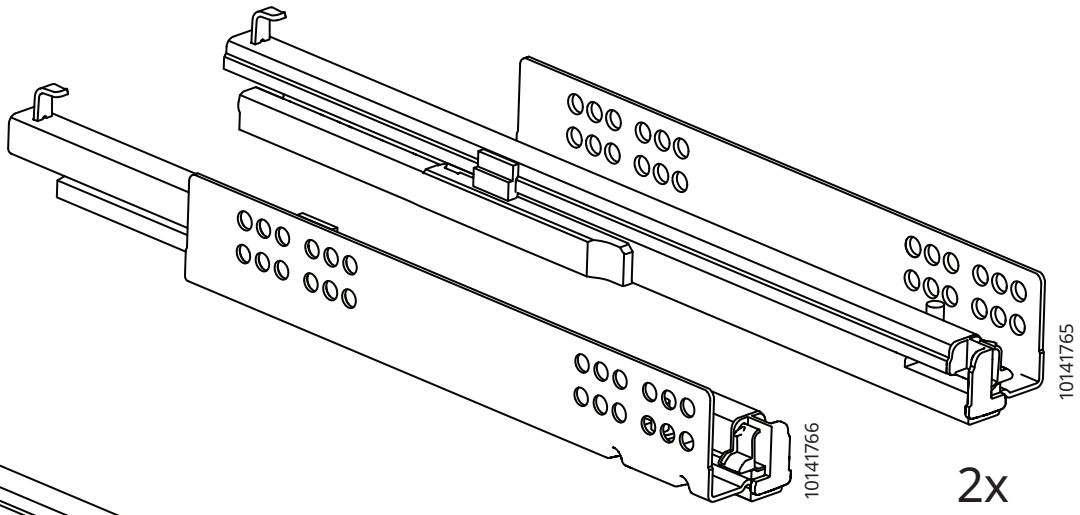

2x

2x

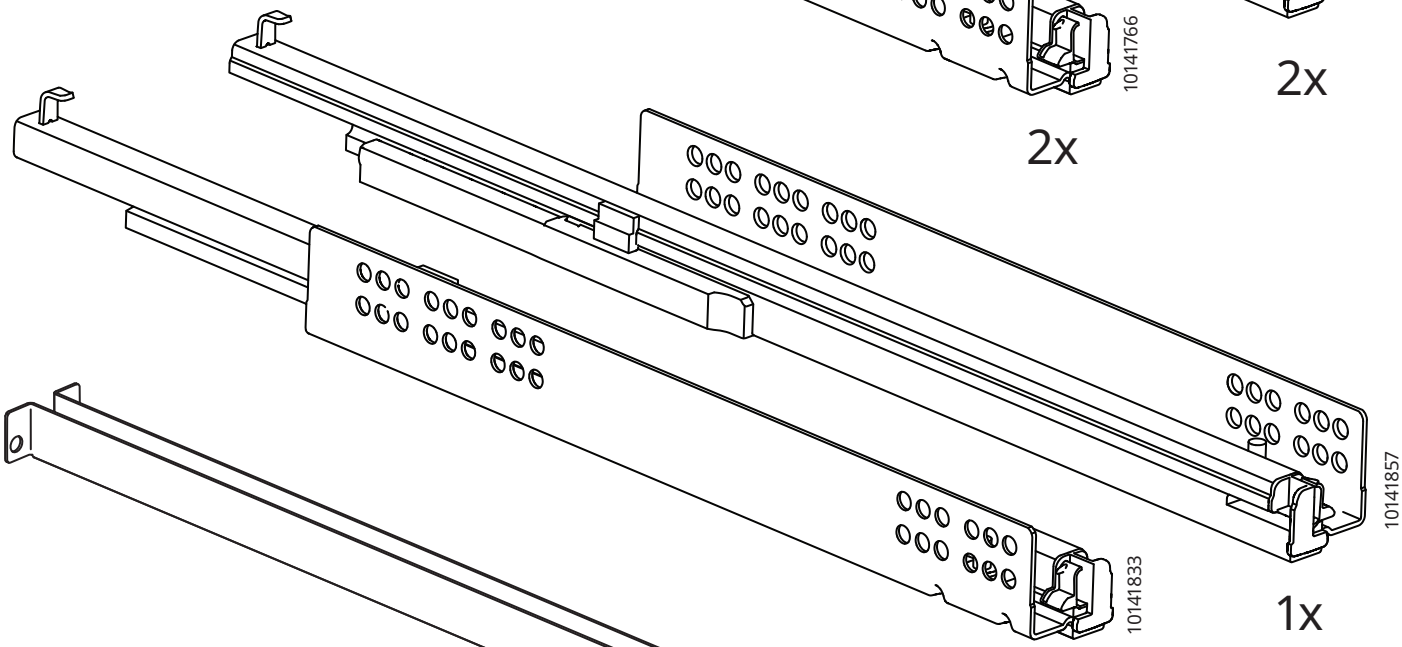

1x

1x

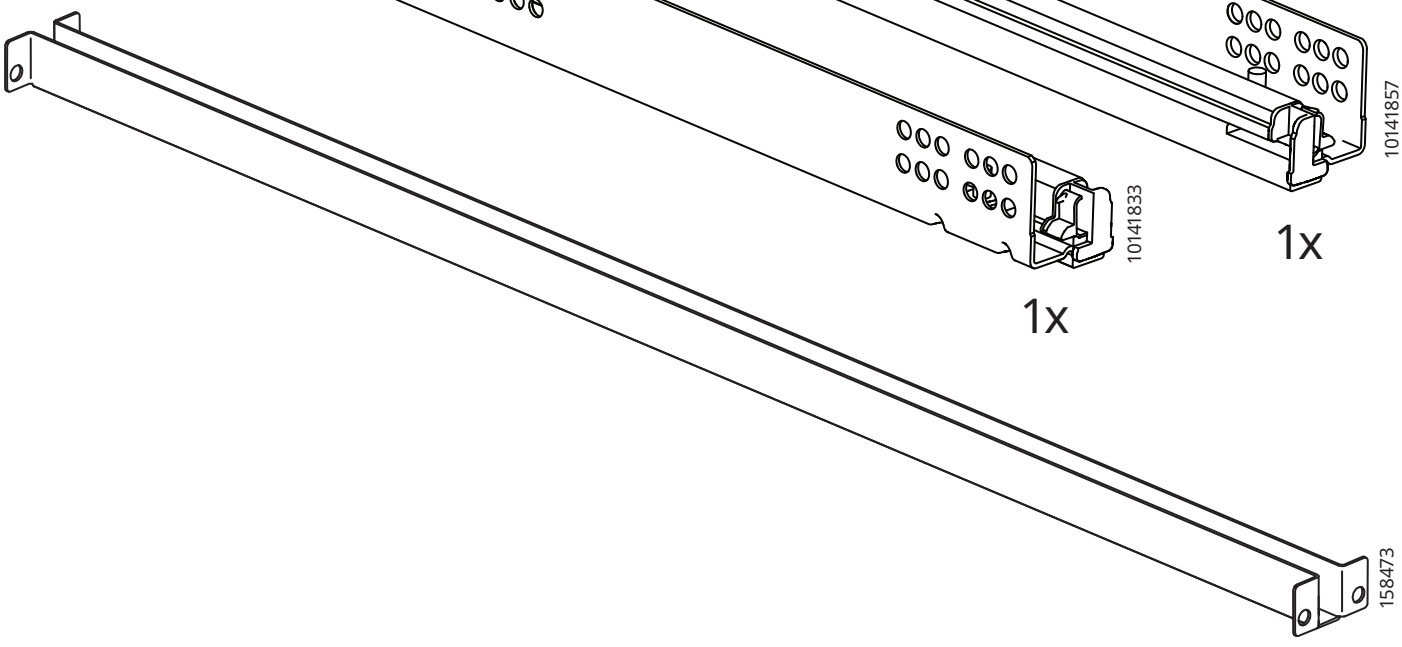

1x

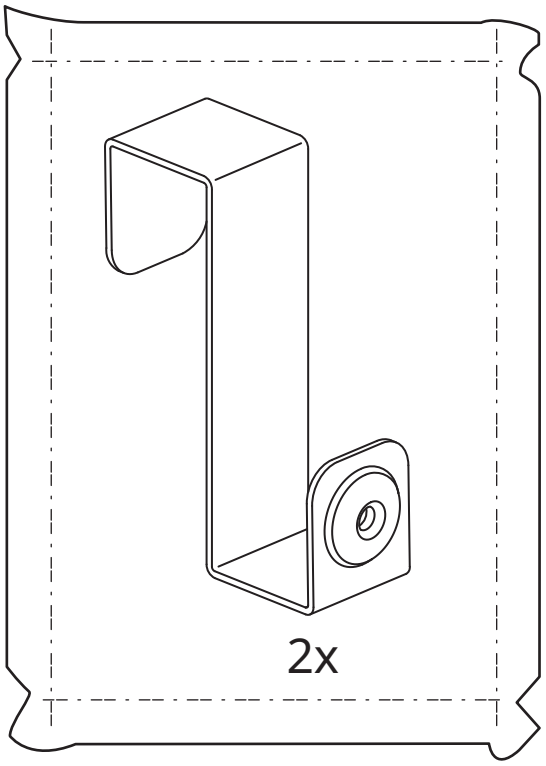

2x

10150055

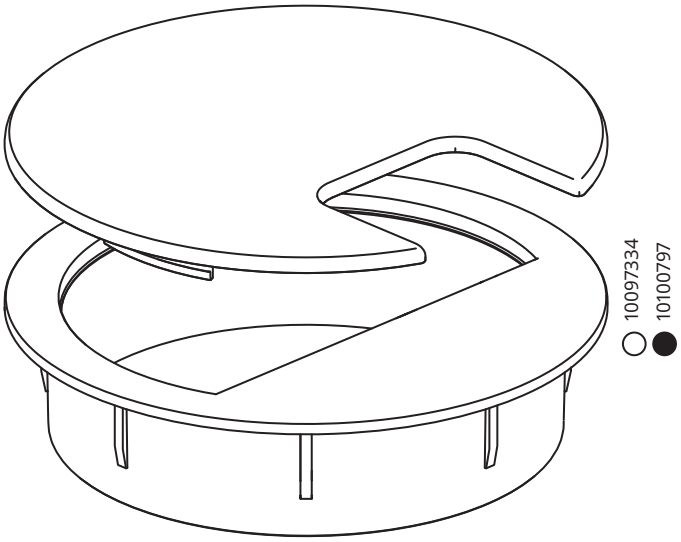

10097334
10100797

2x

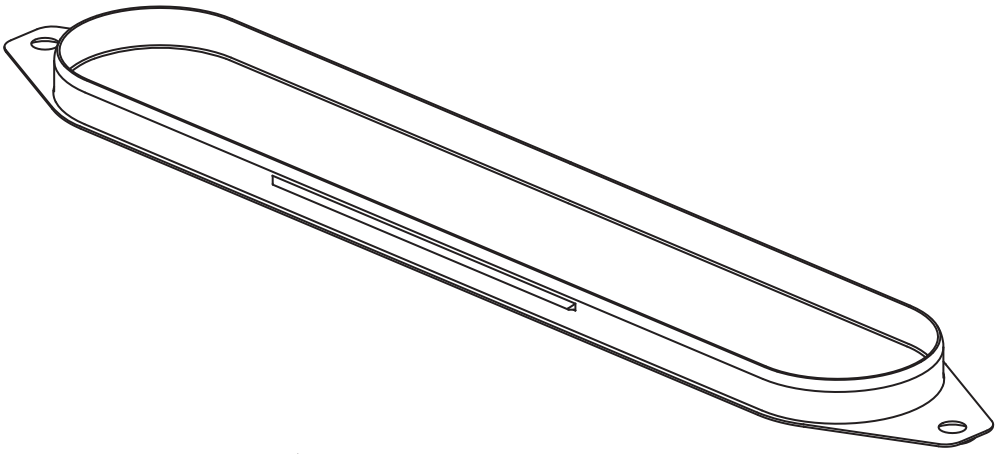

10144064
10139706

3x

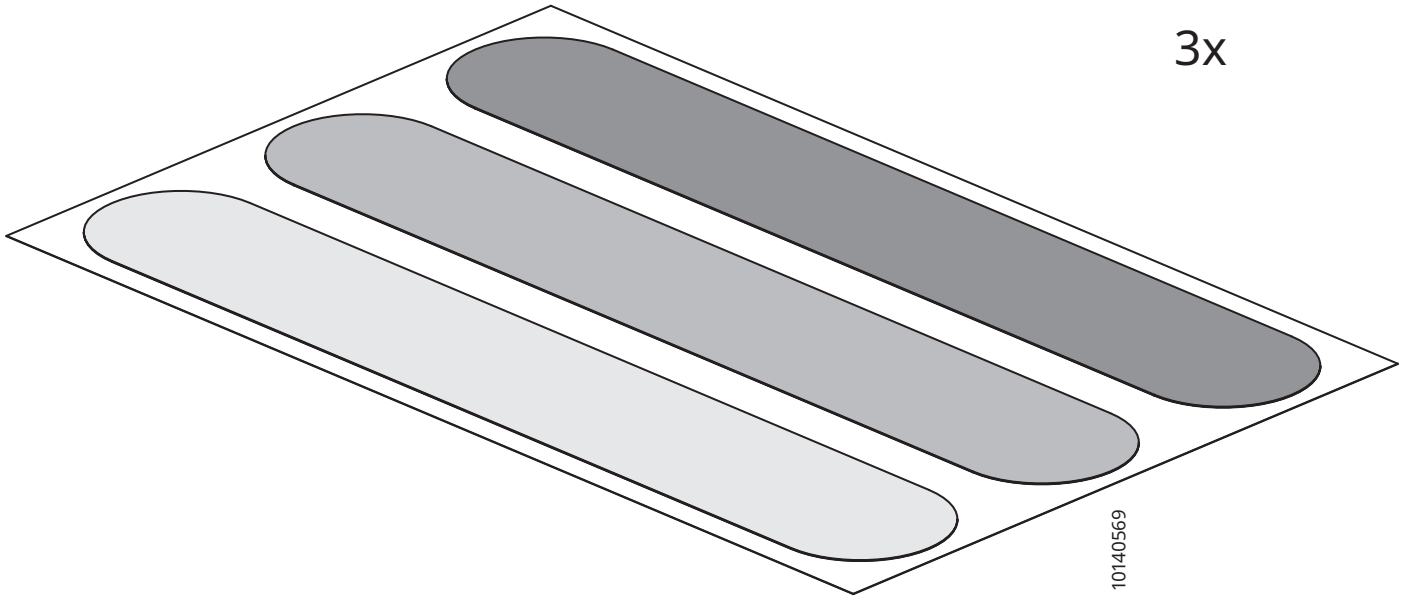

10140569

3x

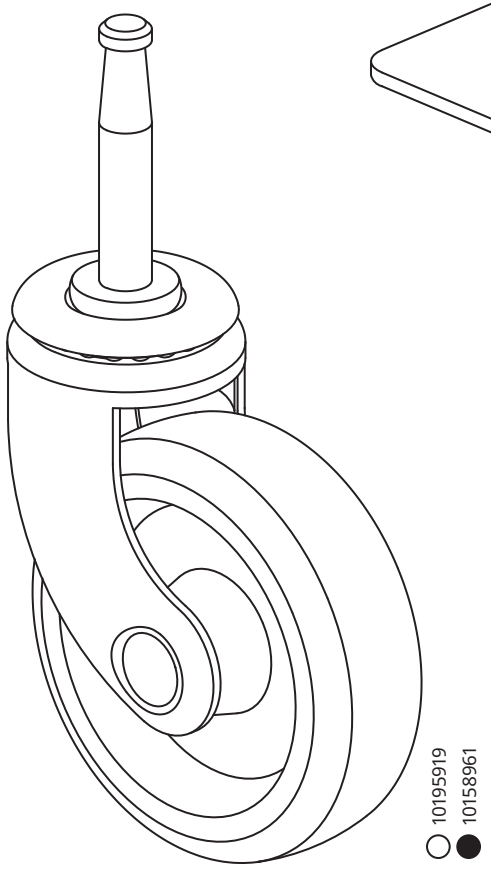

○ 10195919
● 10158961

1x

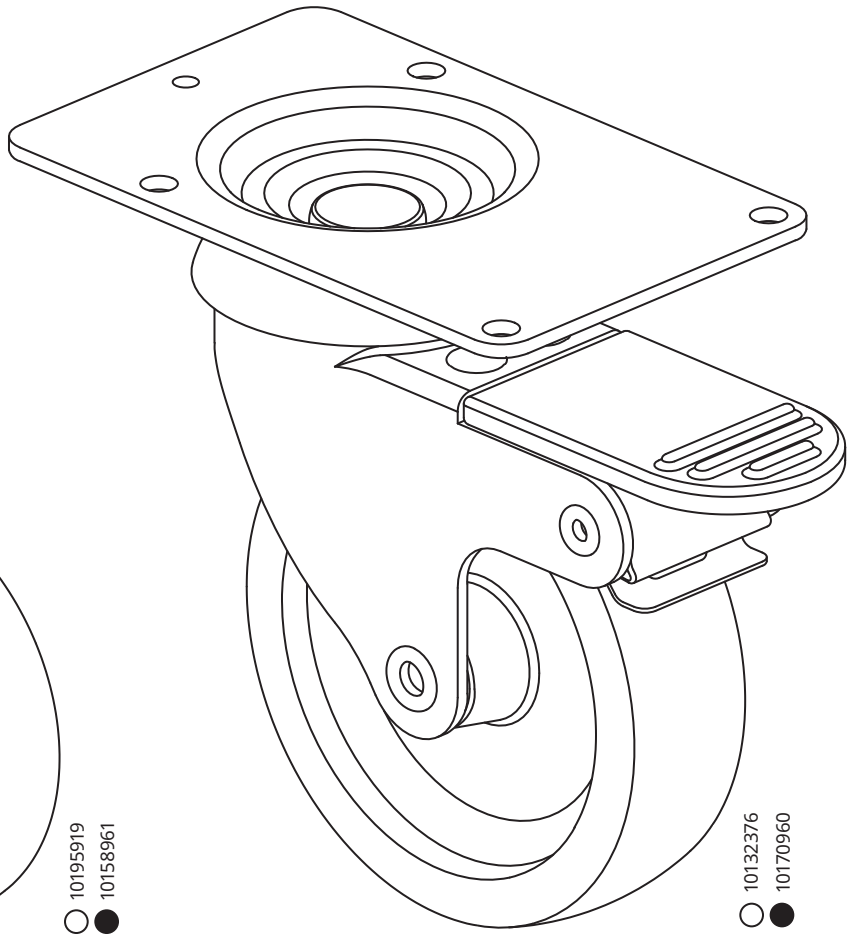

○ 10132376
● 10170960

4x

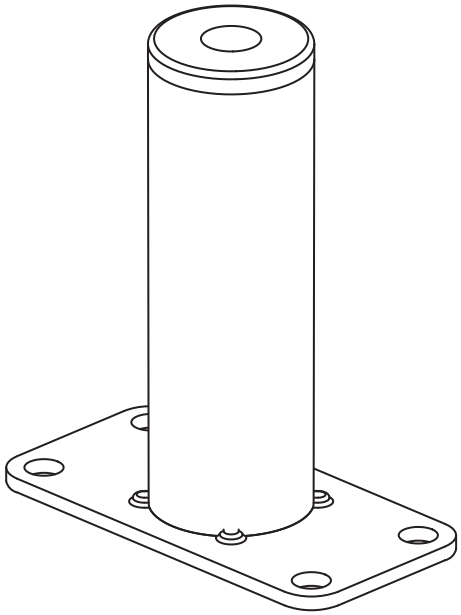

○ 10209357
● 10140045

1x

1

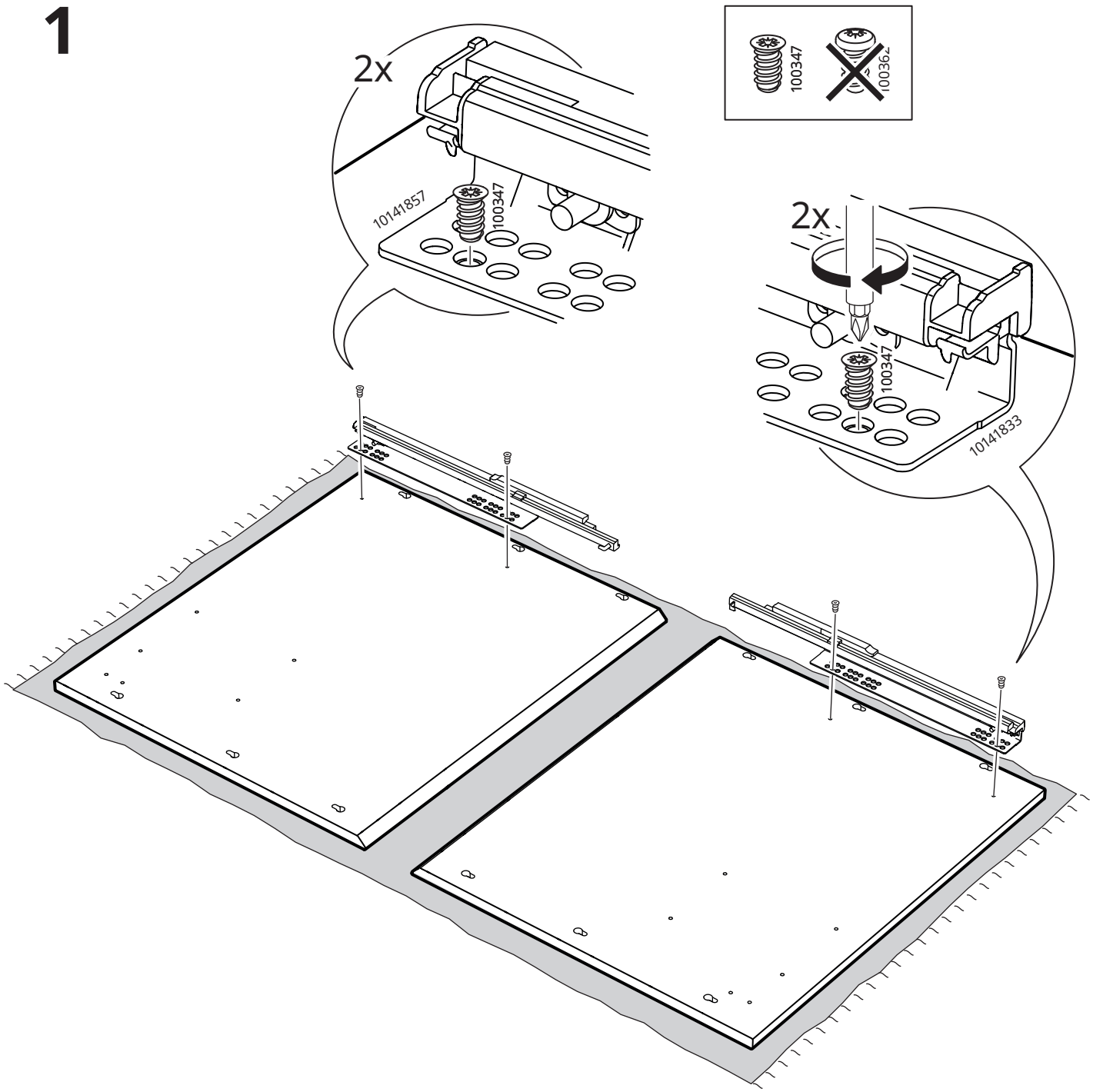

2

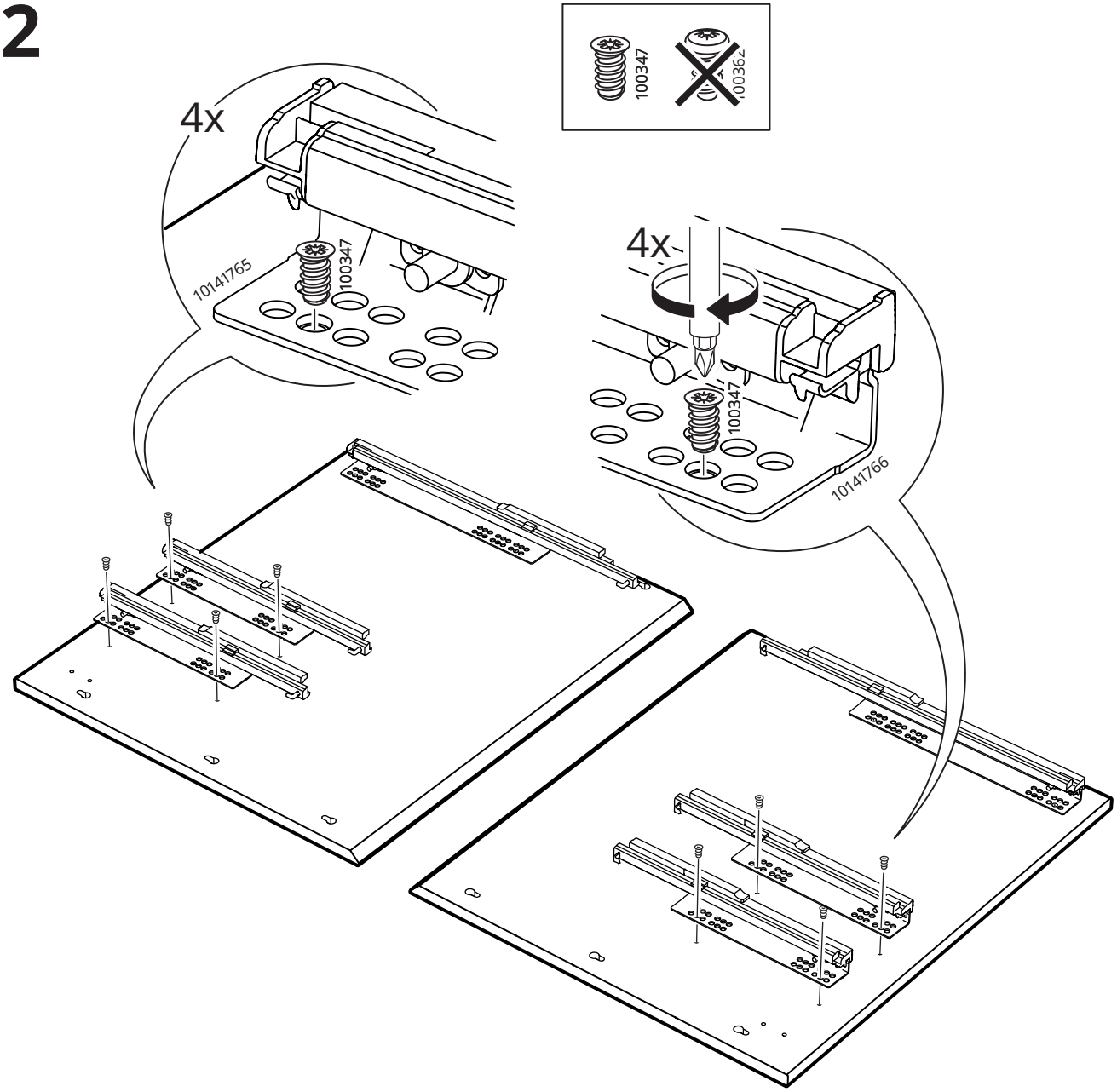

3

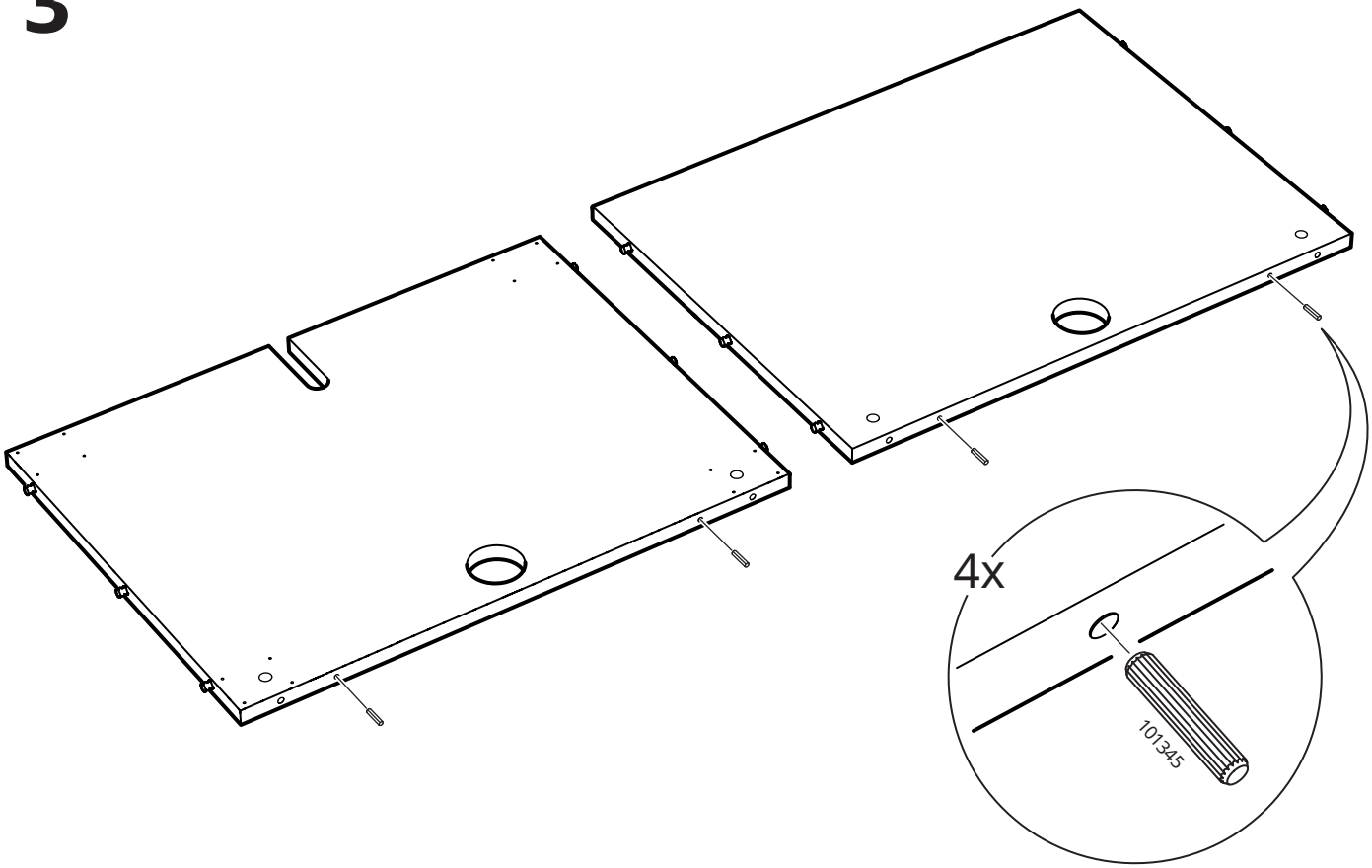

4

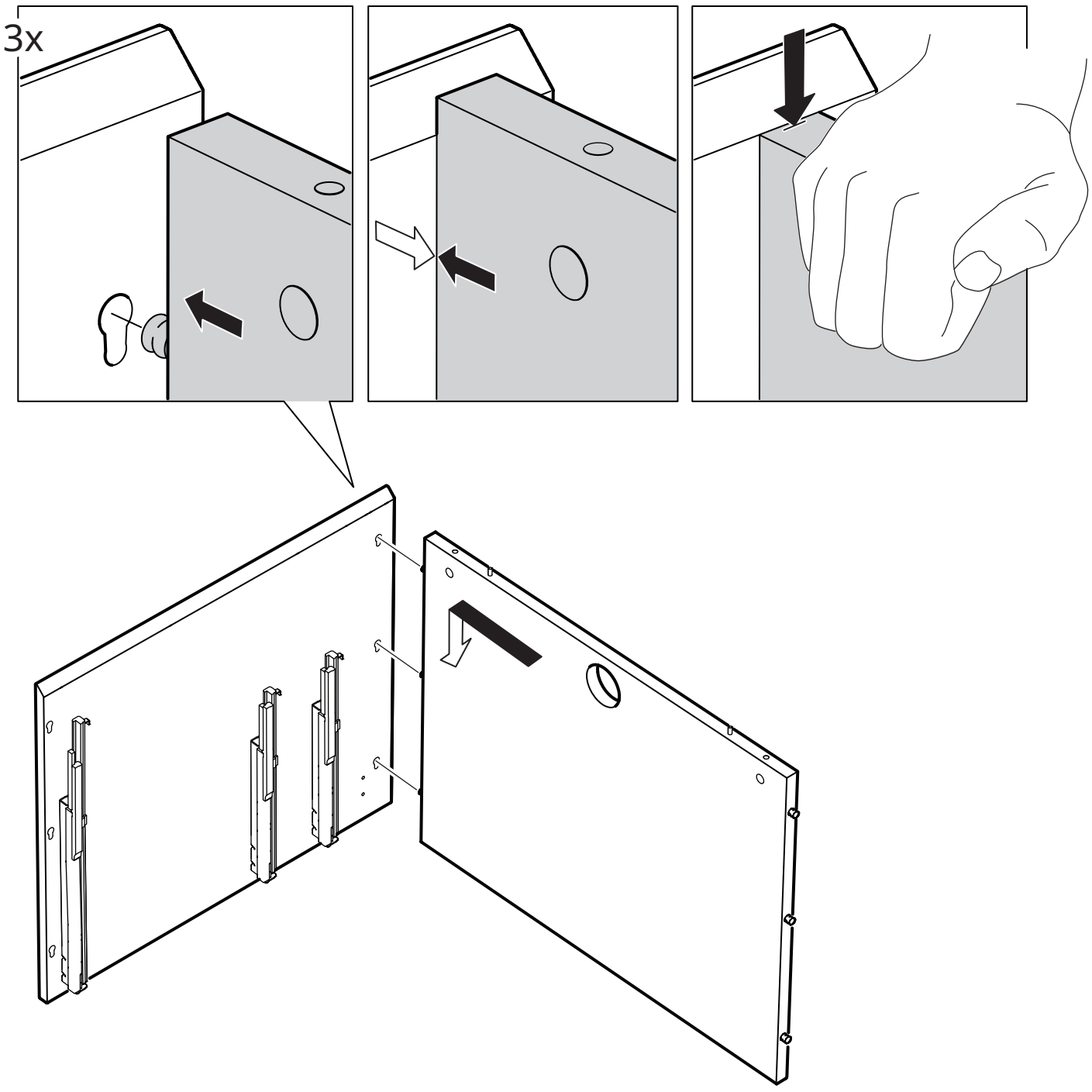

5

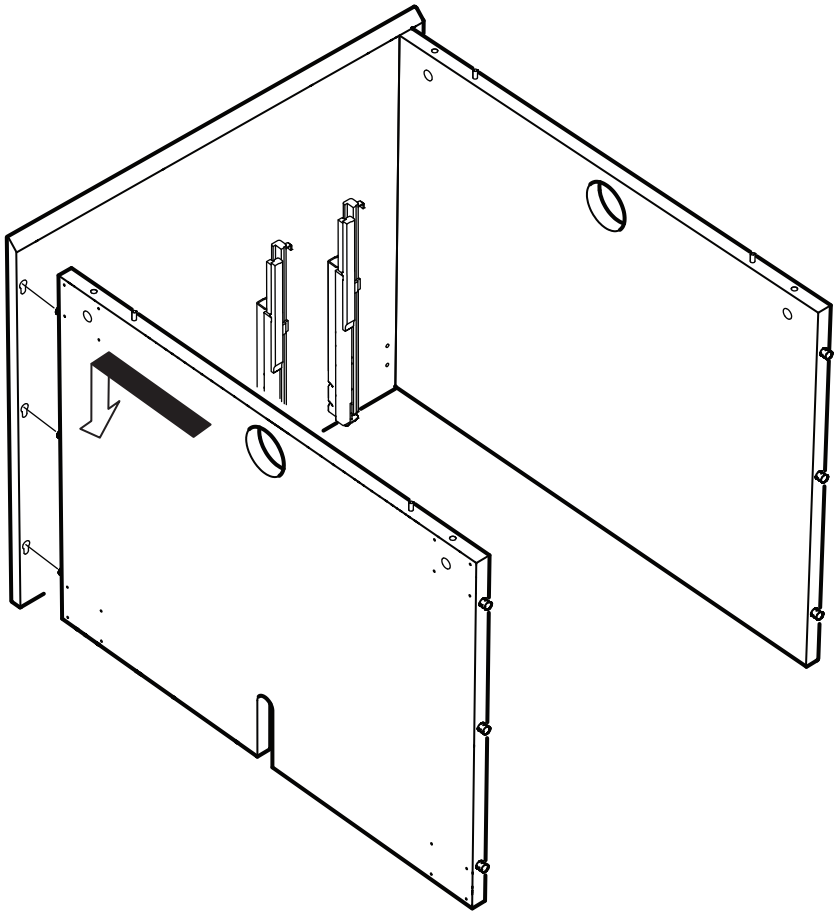

6

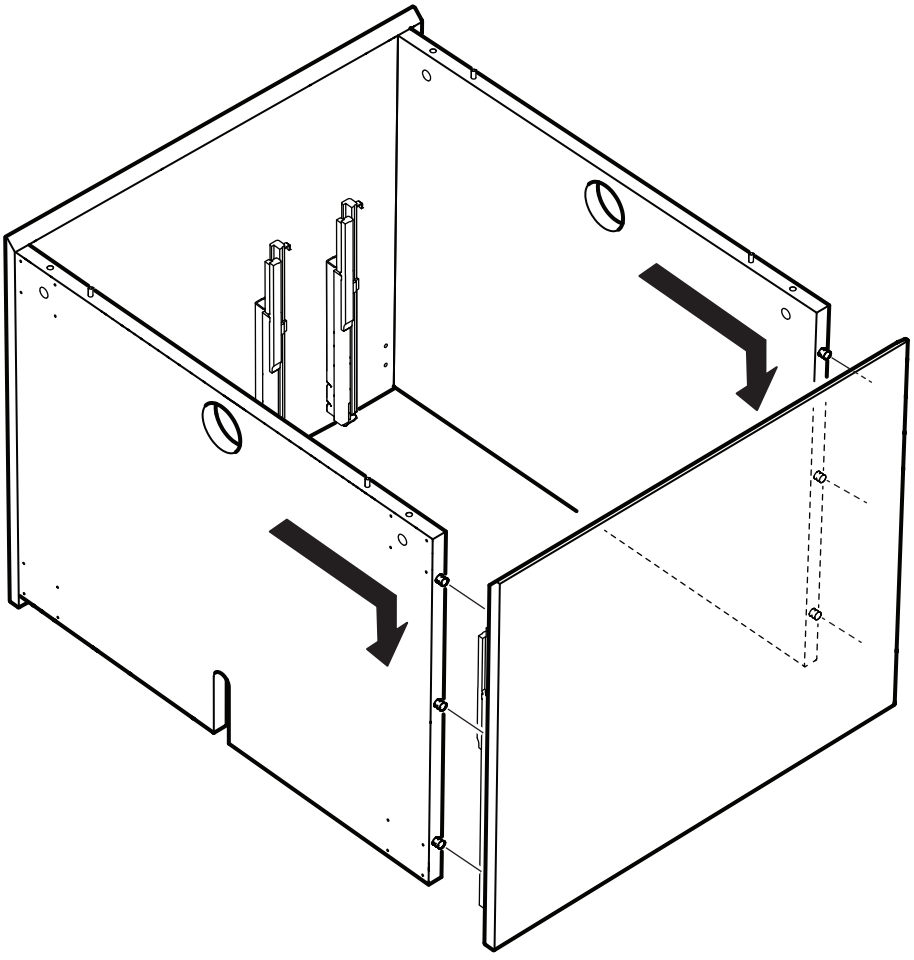

7

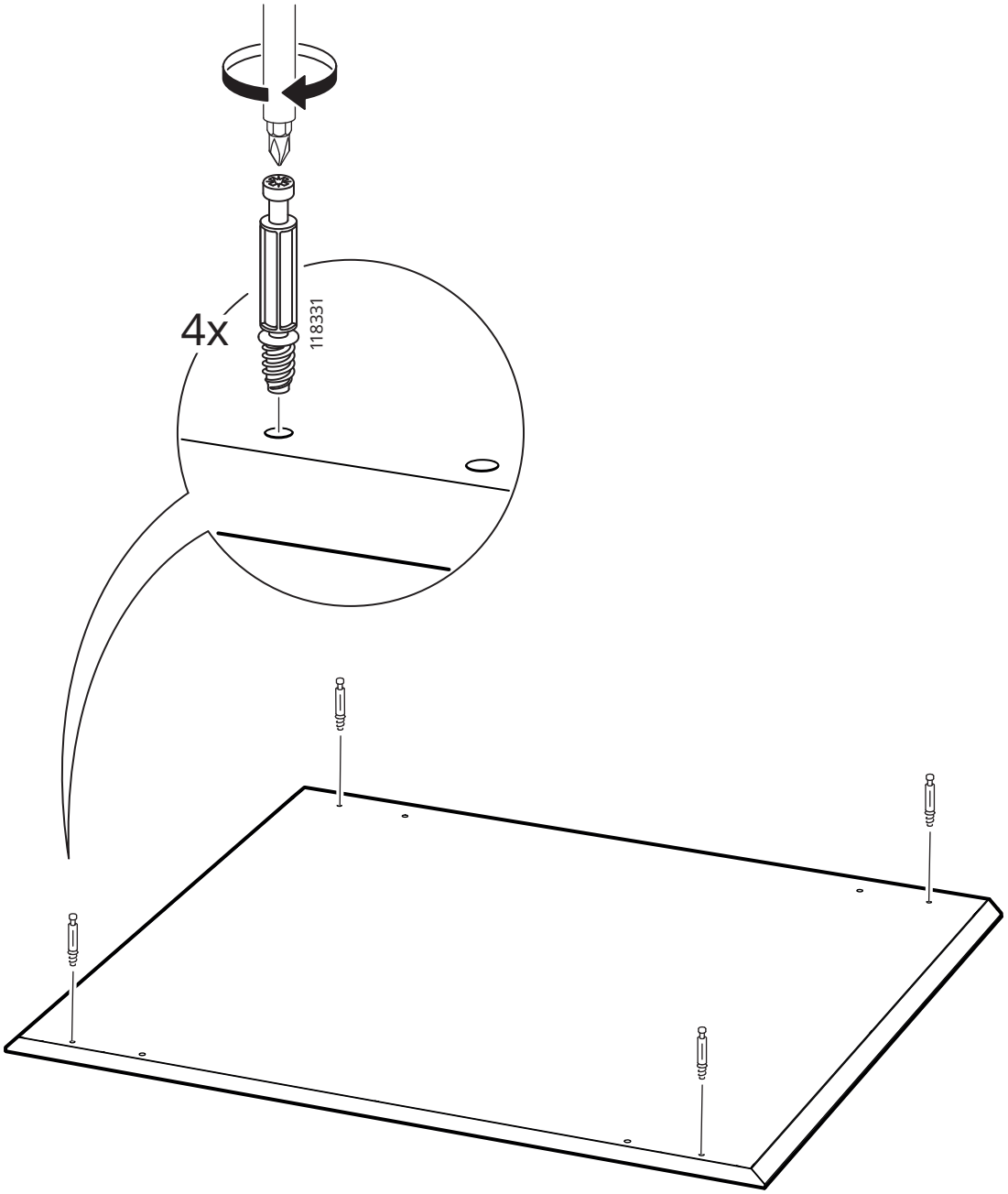

8

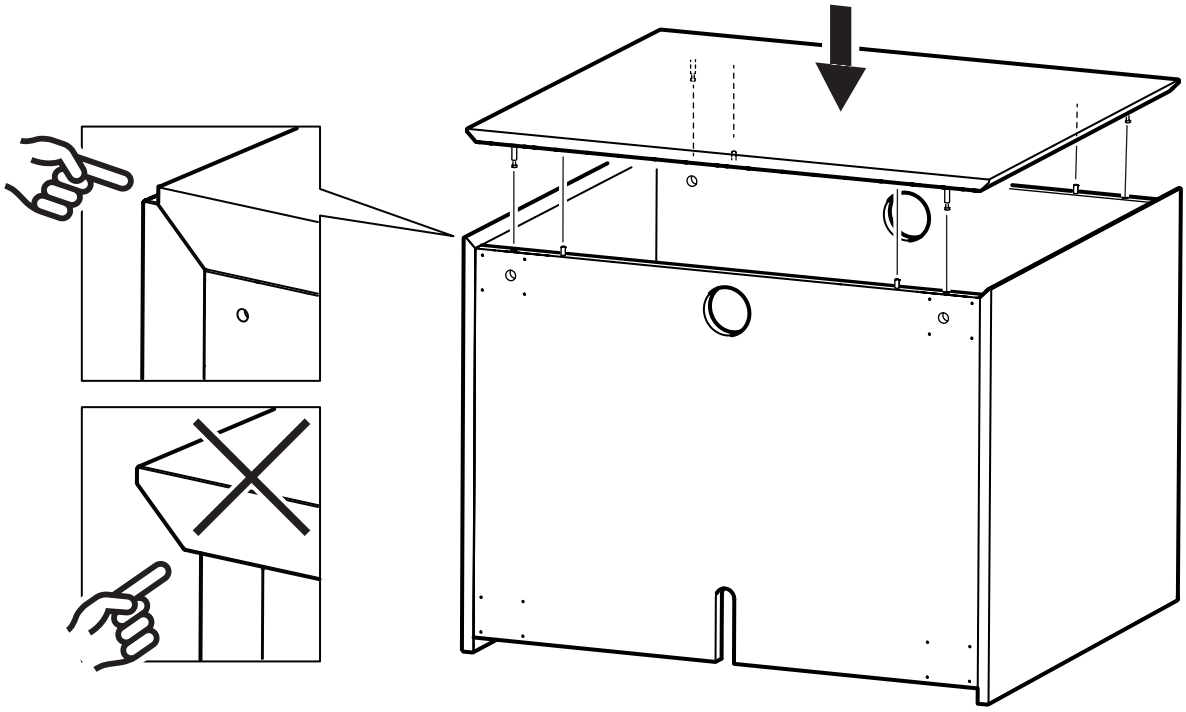

9

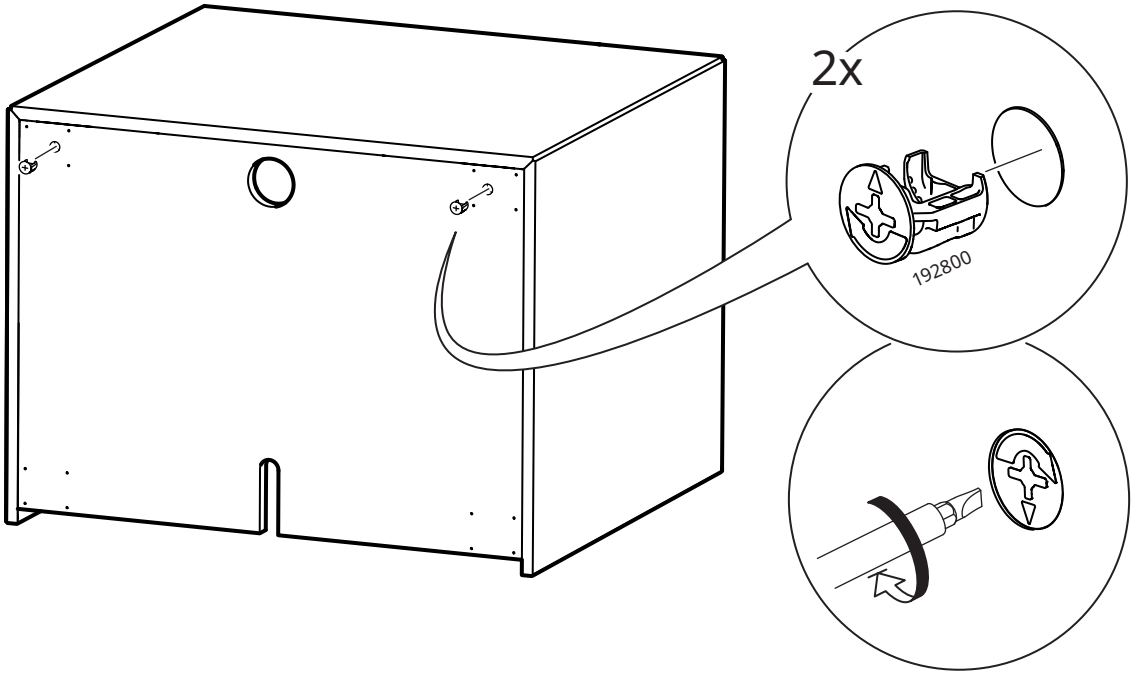

10

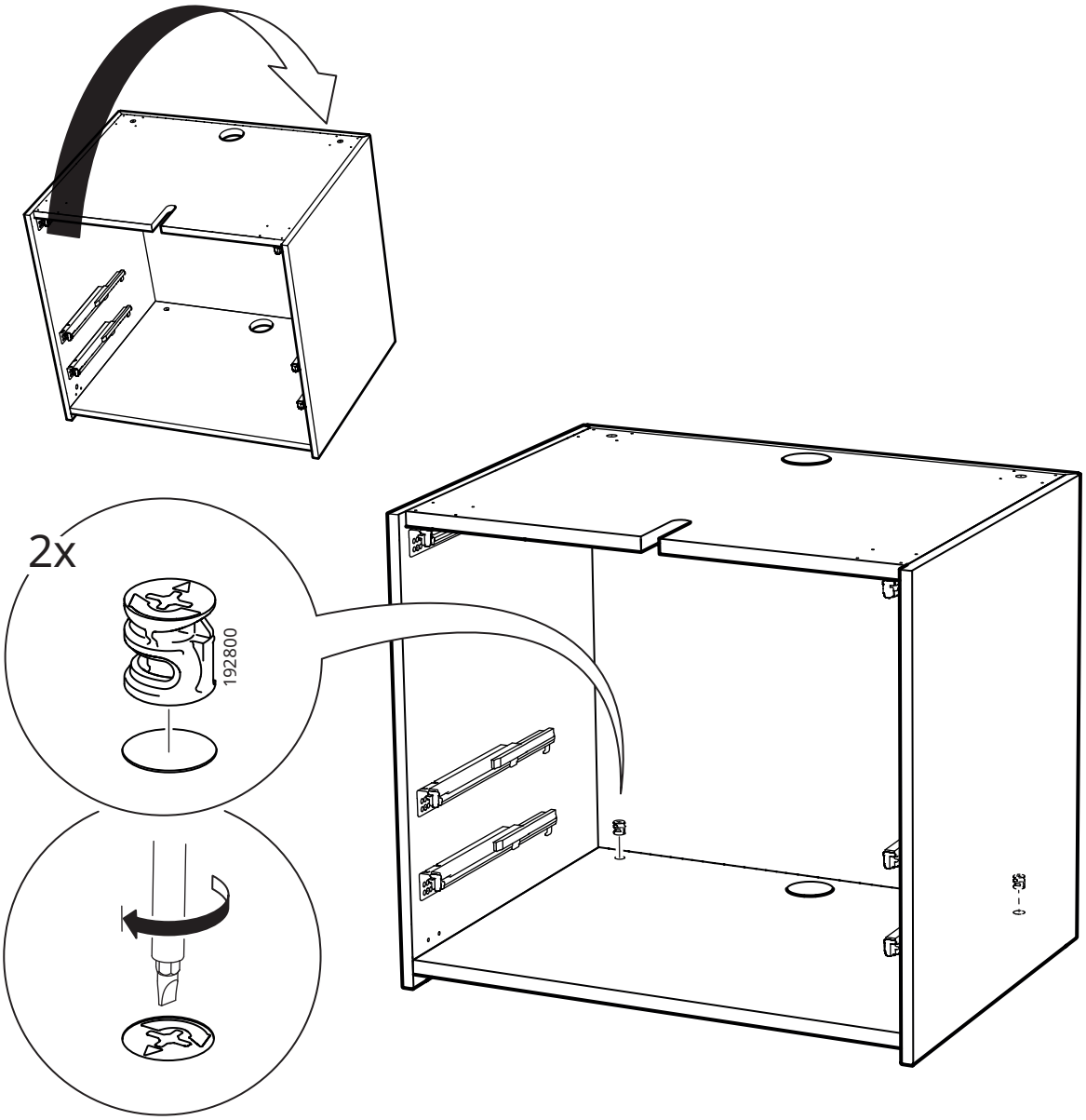

11

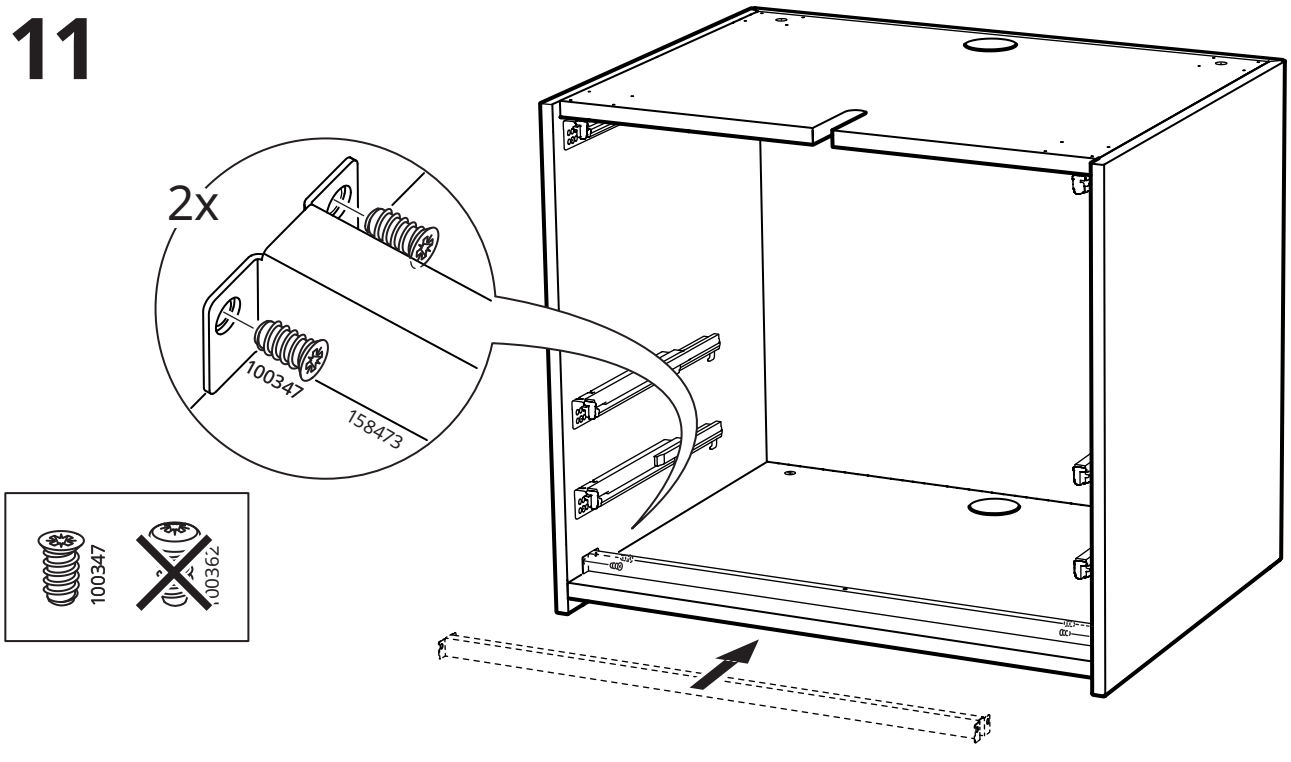

12

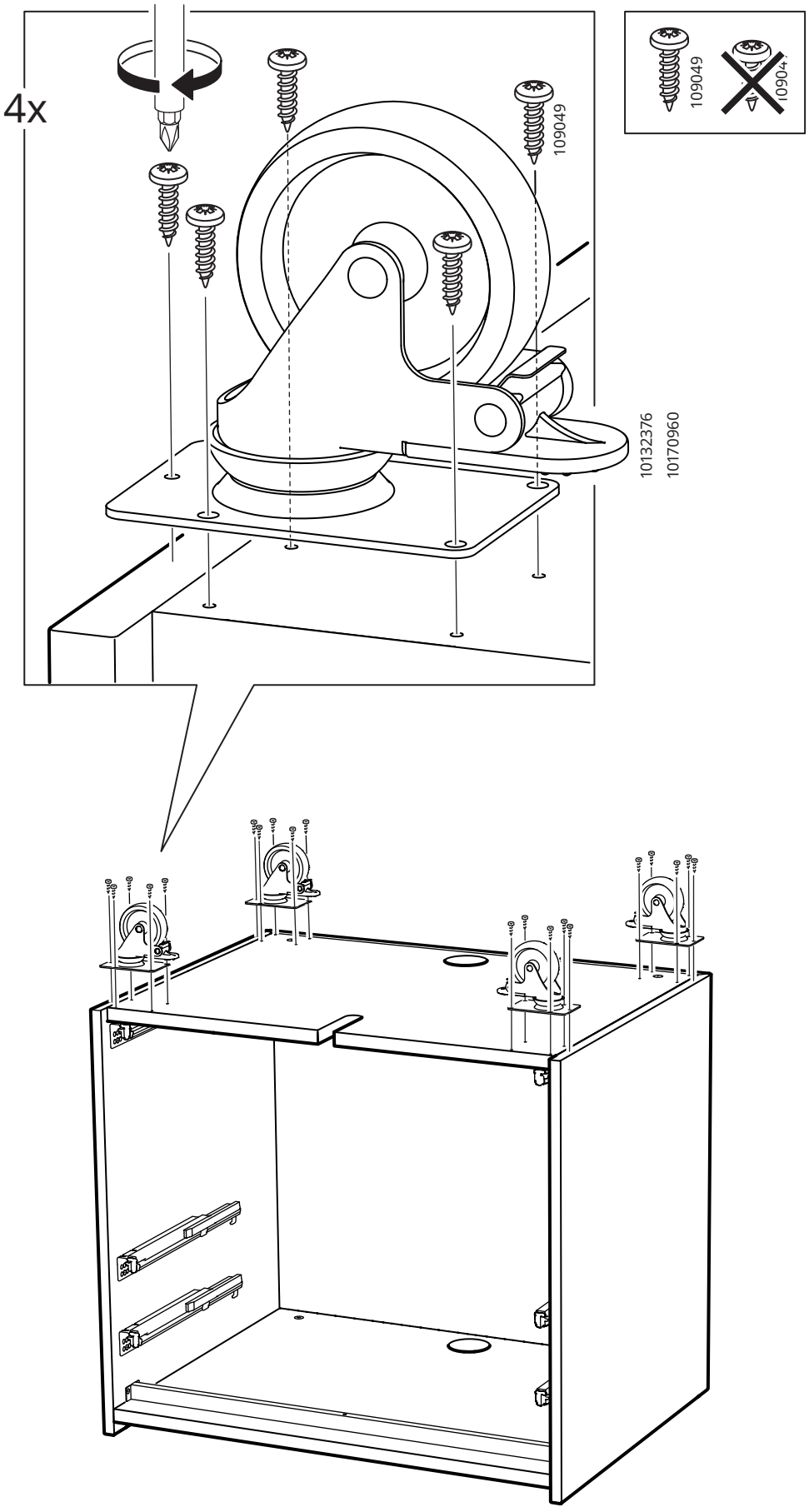

13

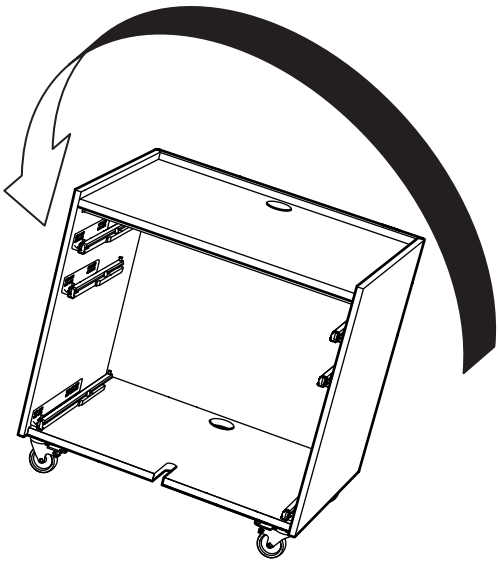

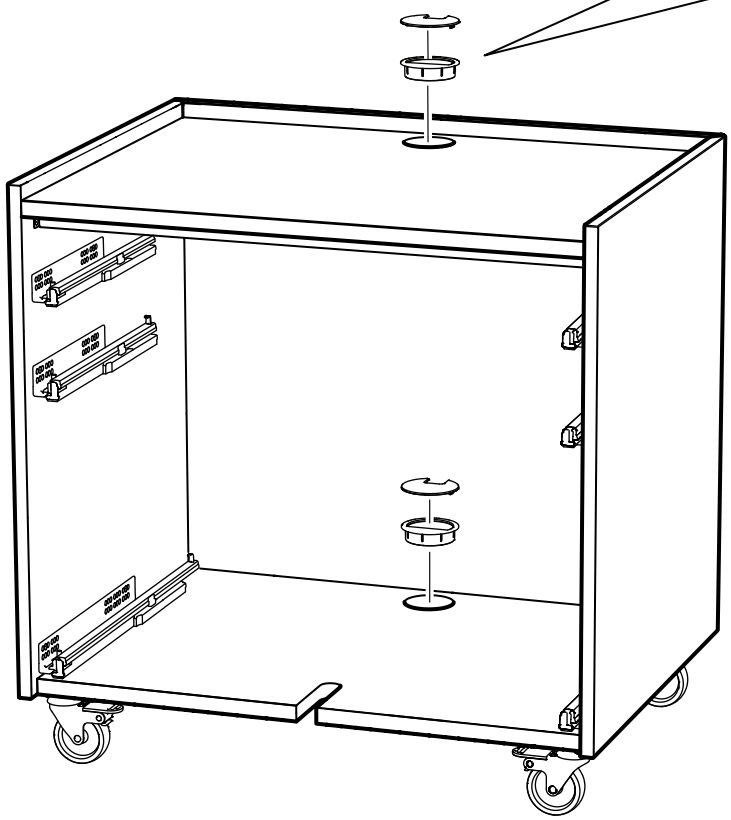

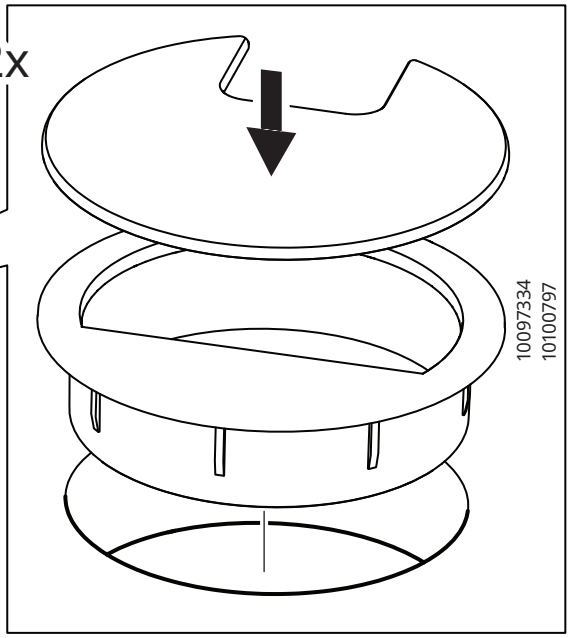

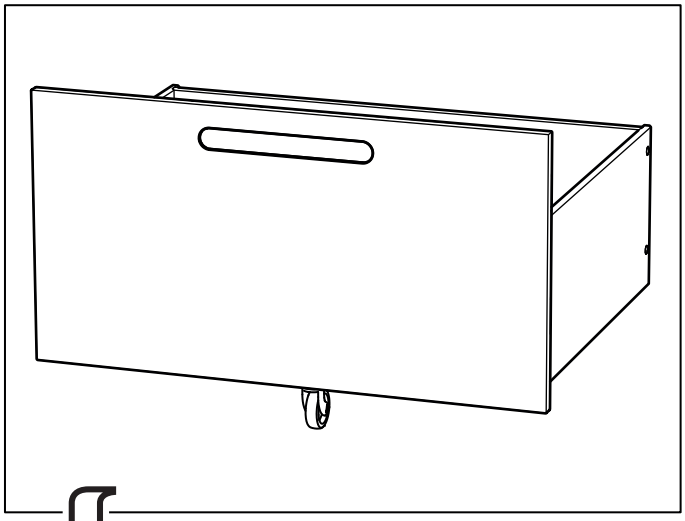

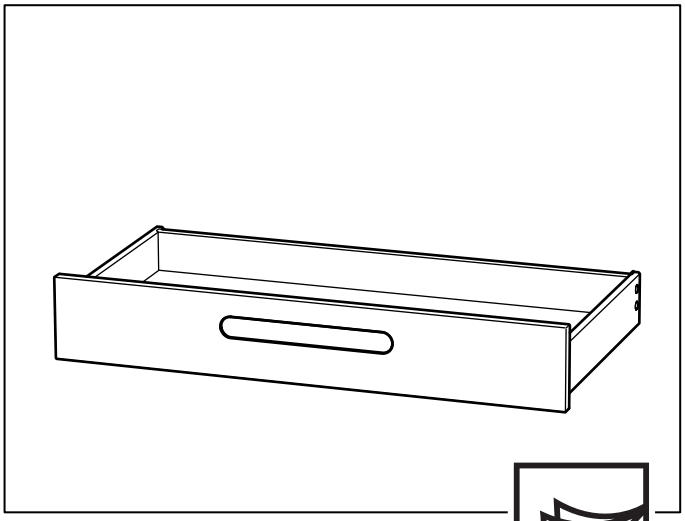

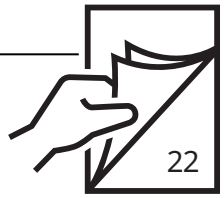

14

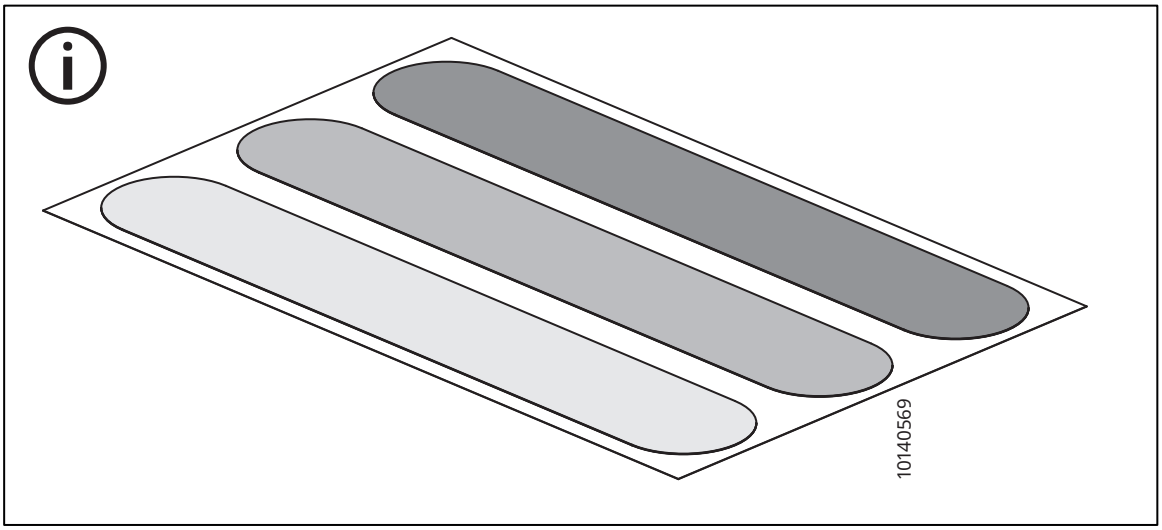

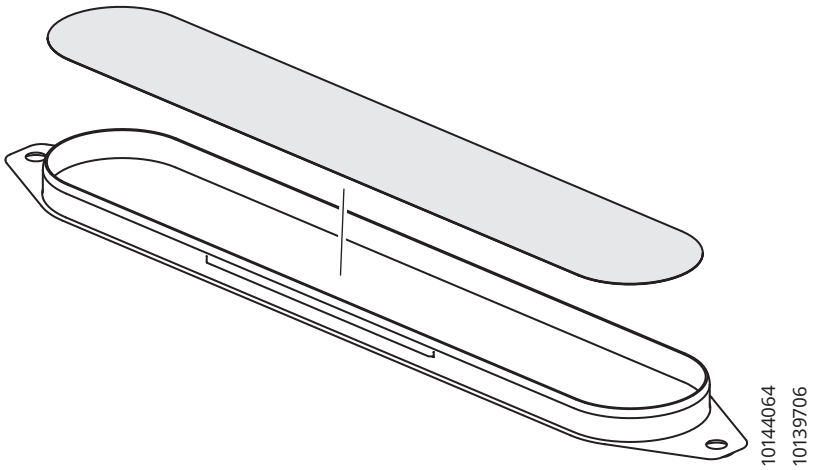

15

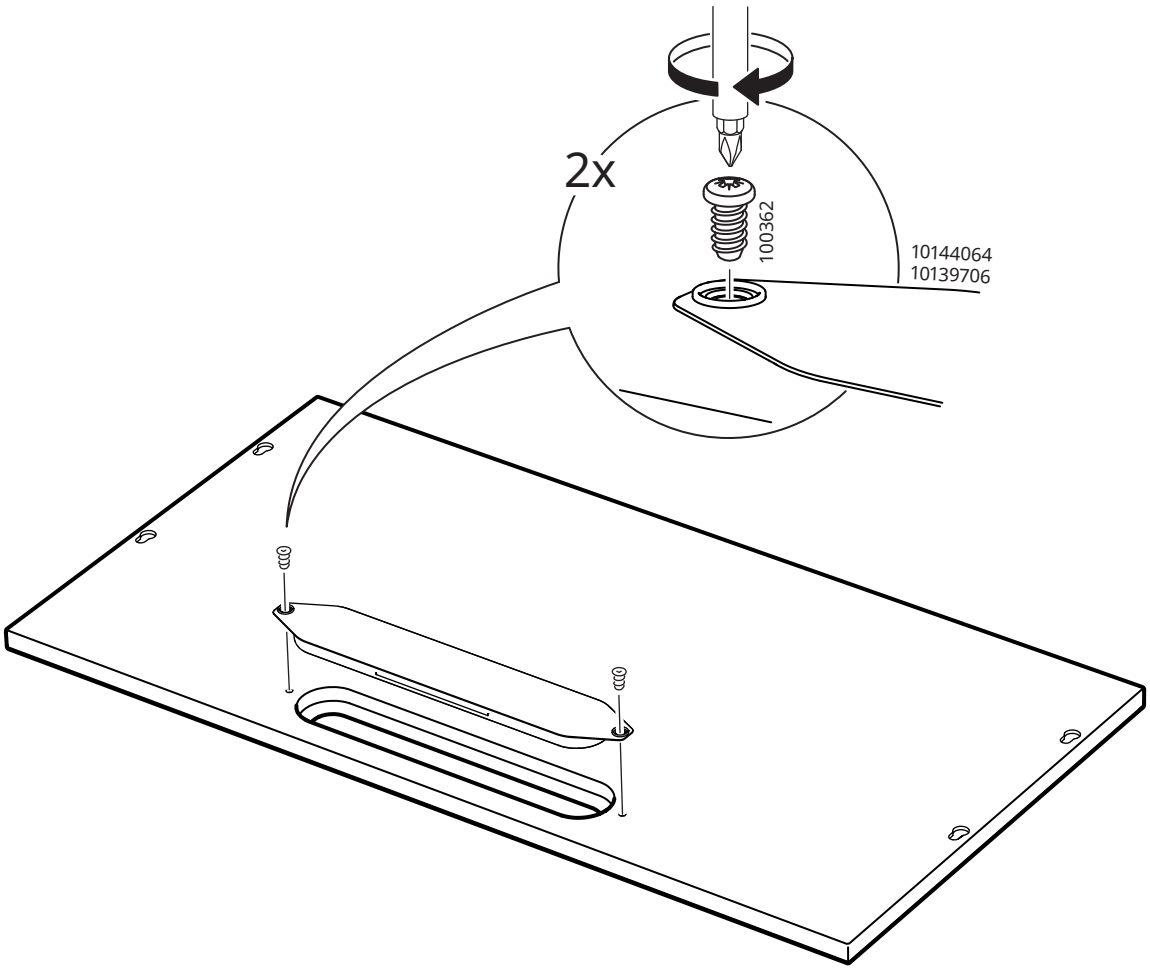

16

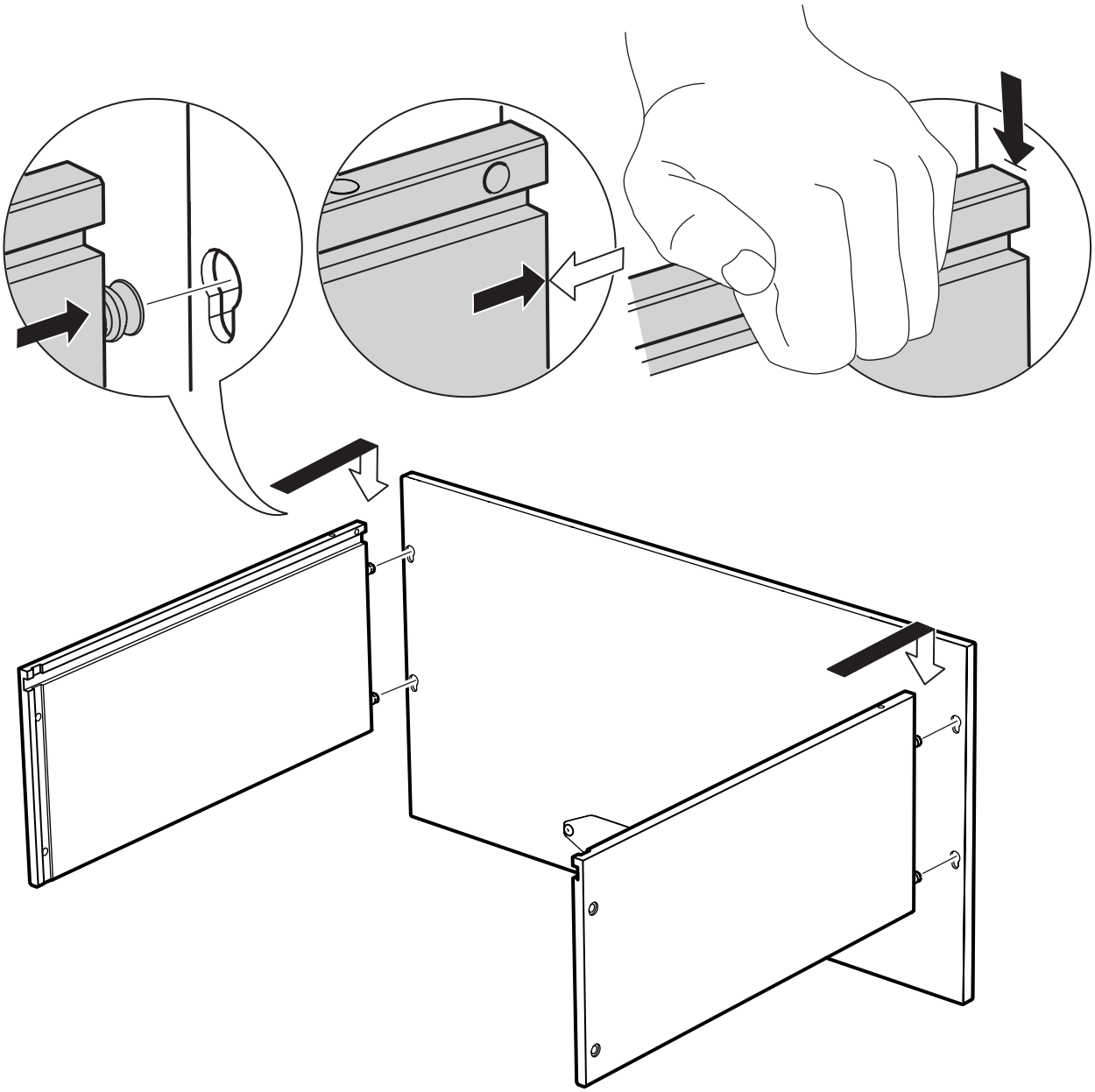

17

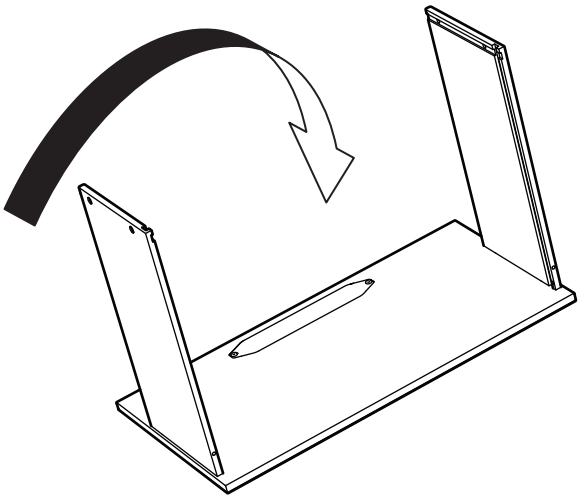

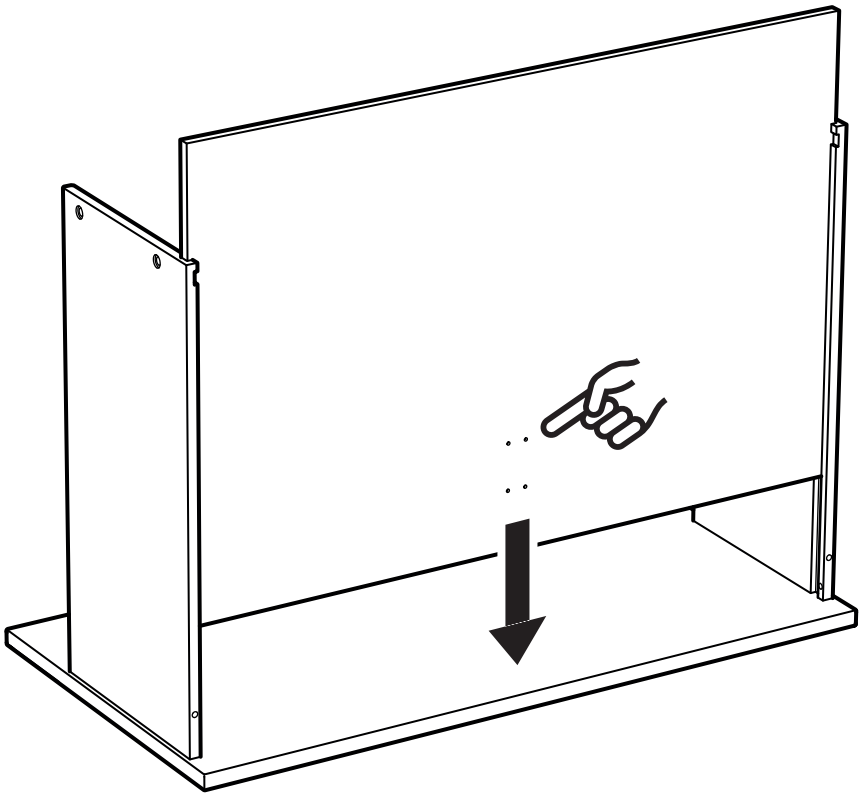

18

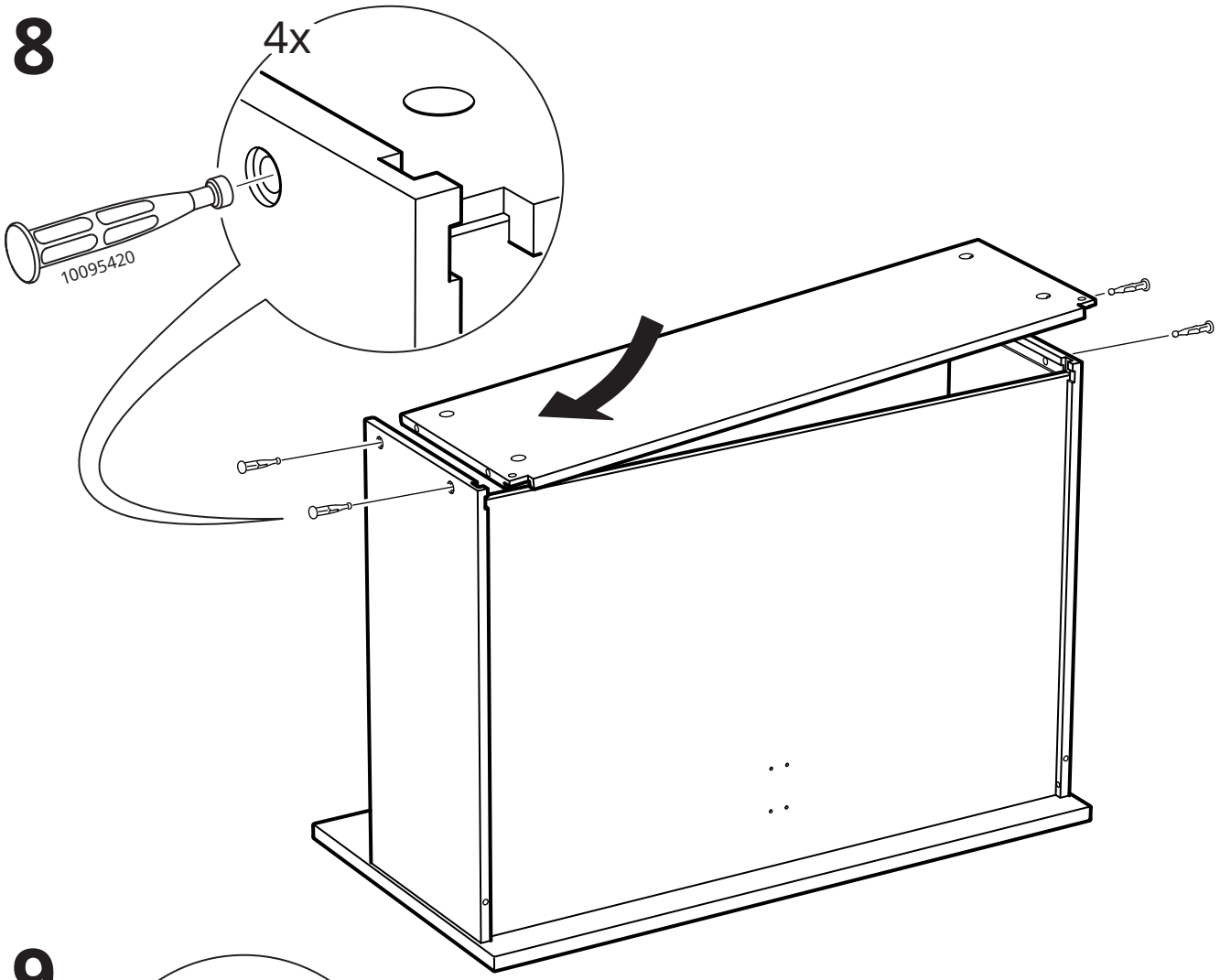

19

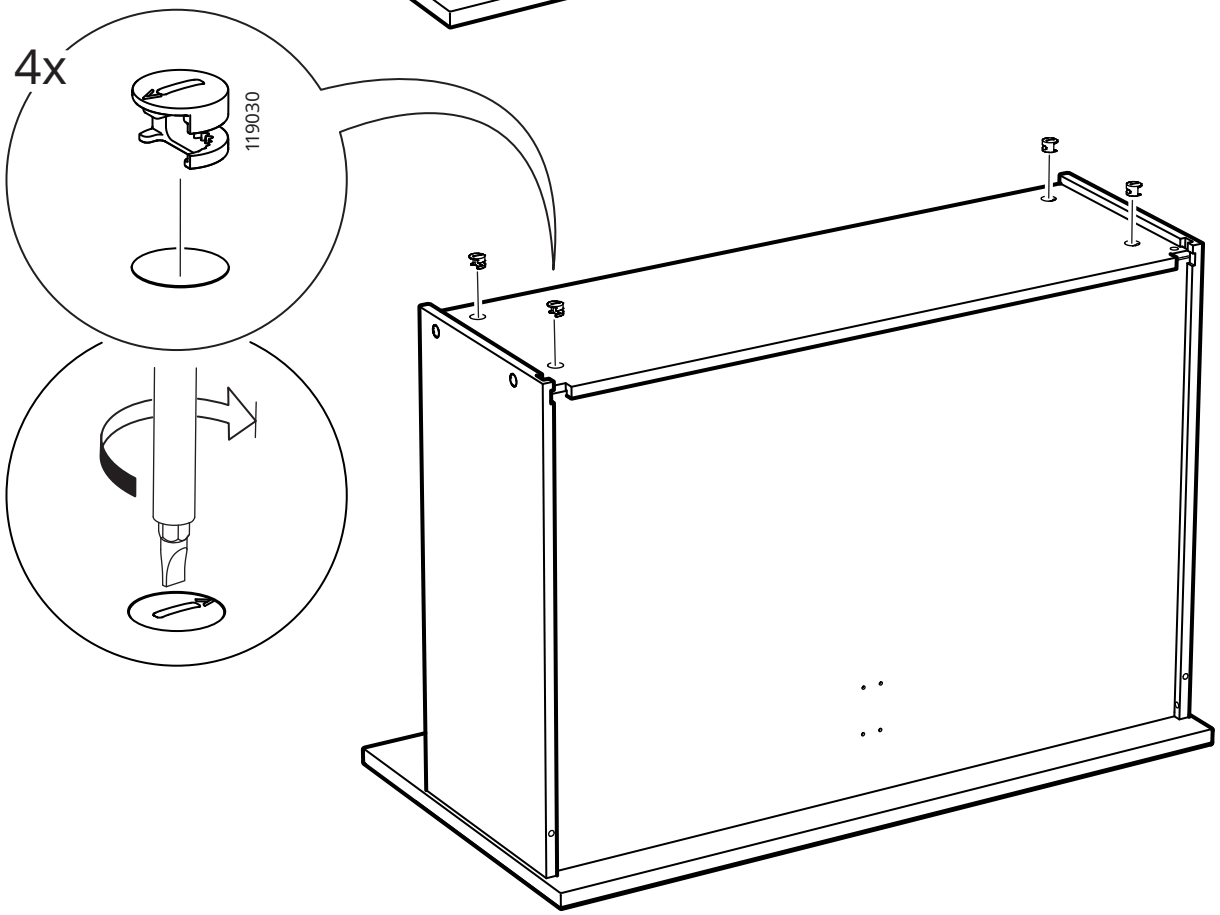

20

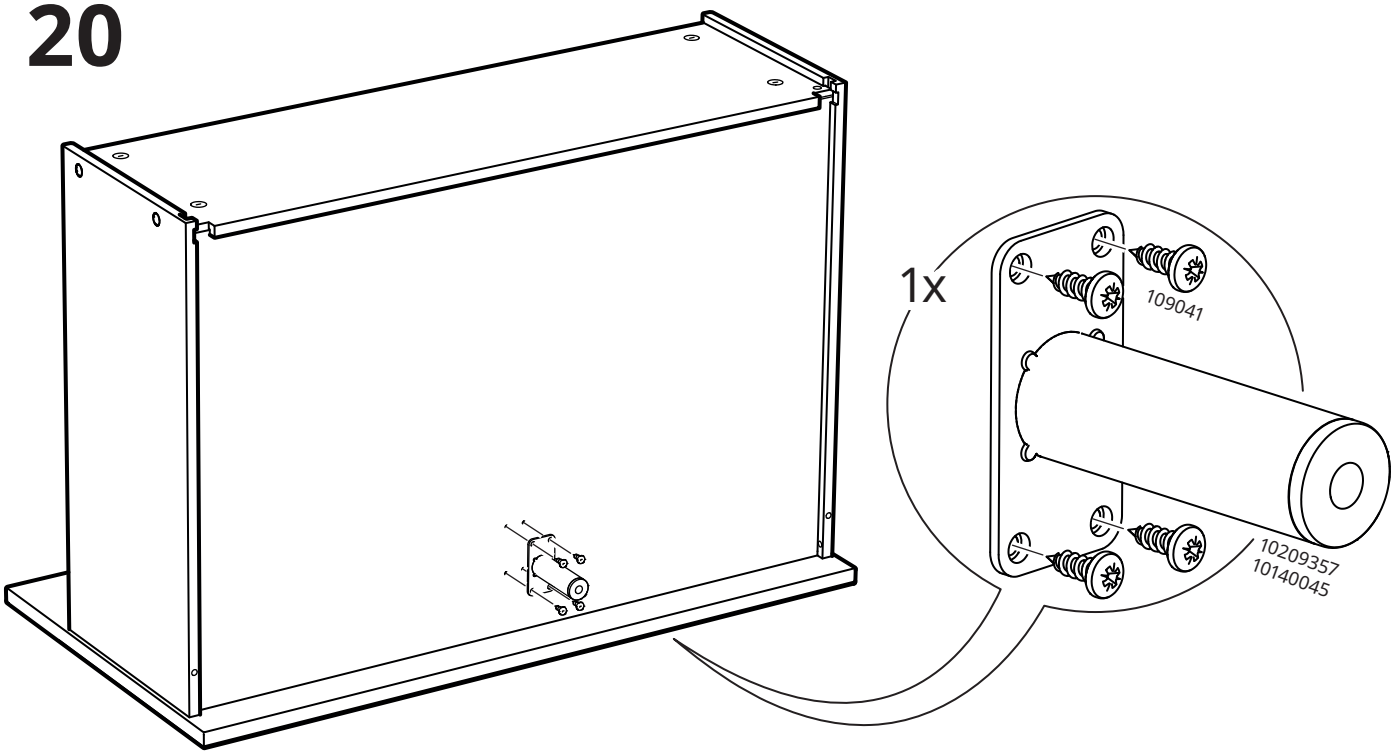

21

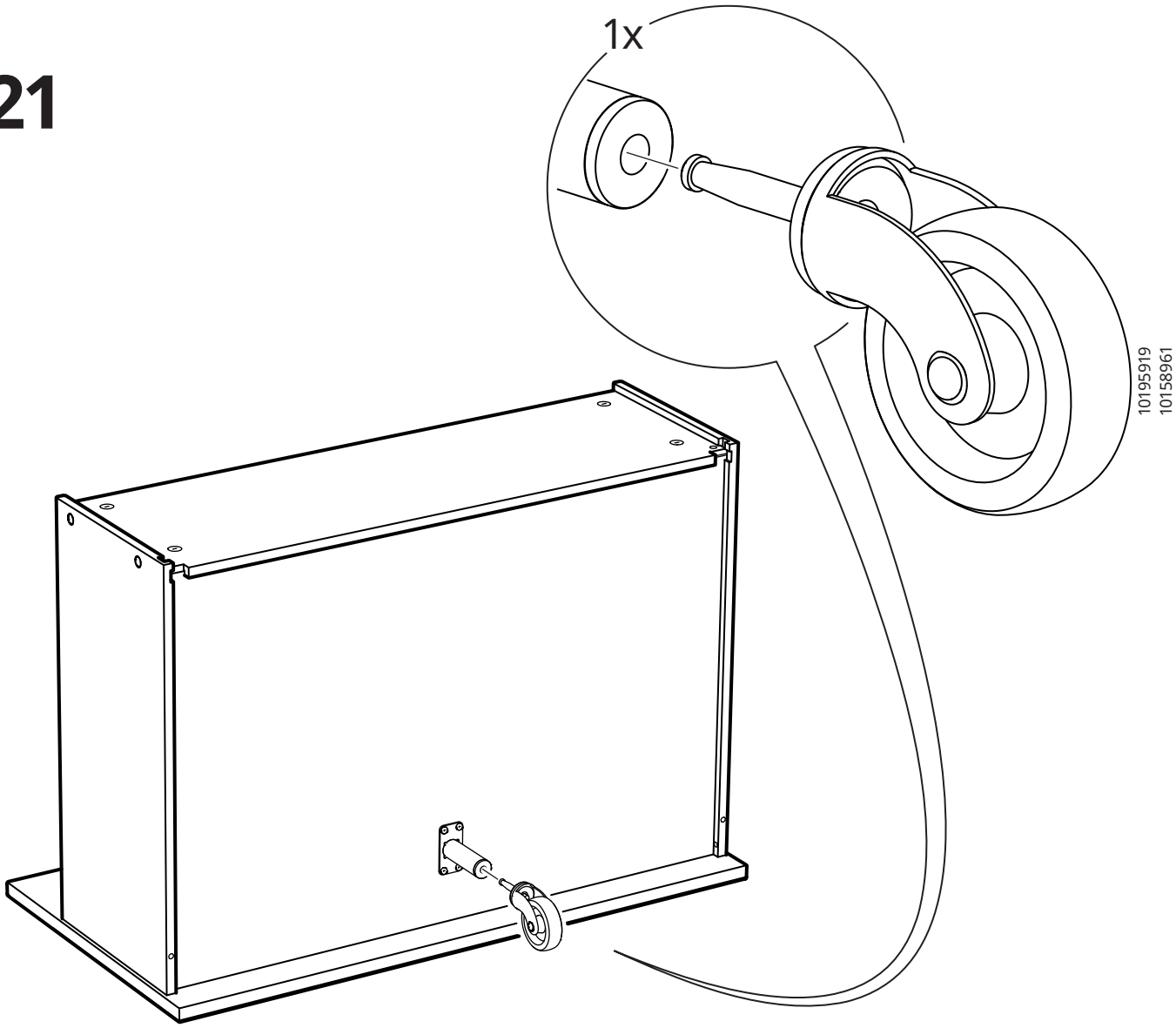

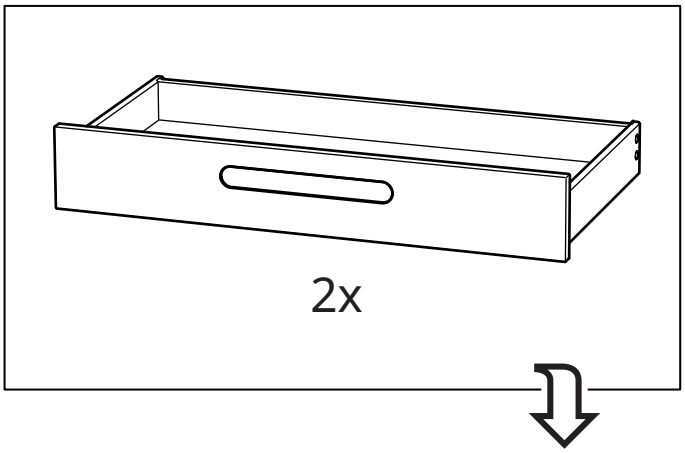

22

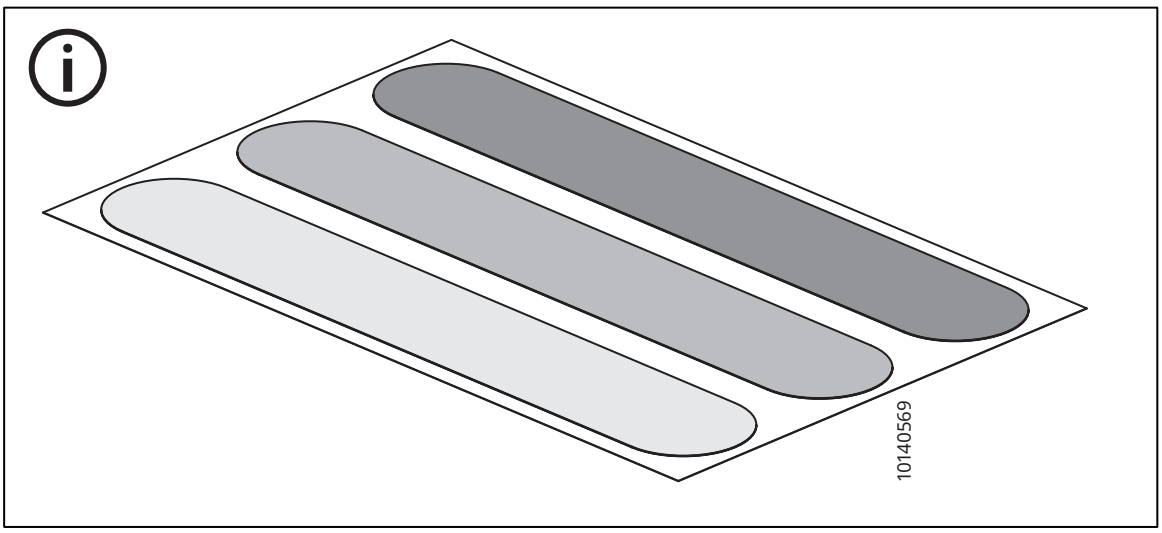

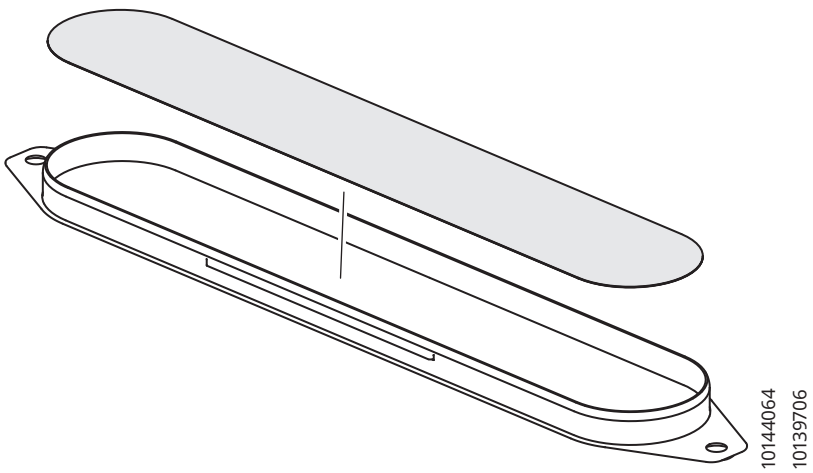

23

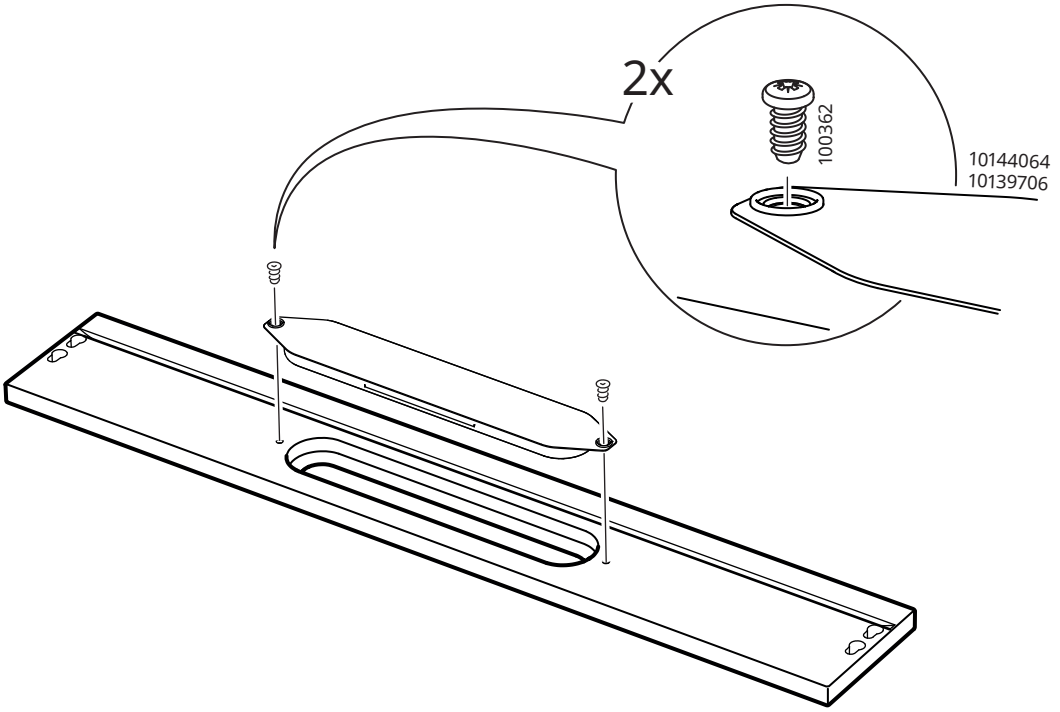

24

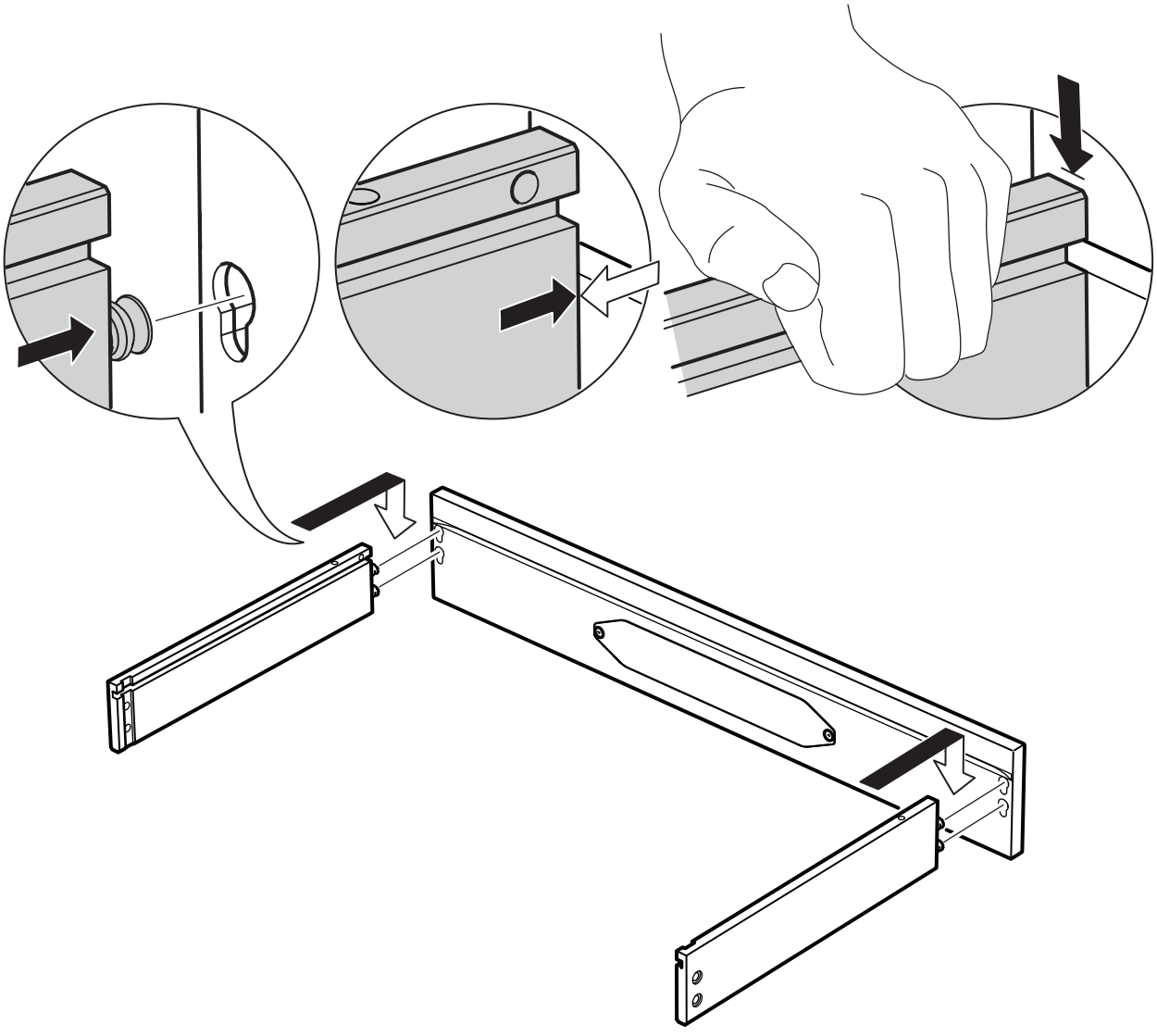

25

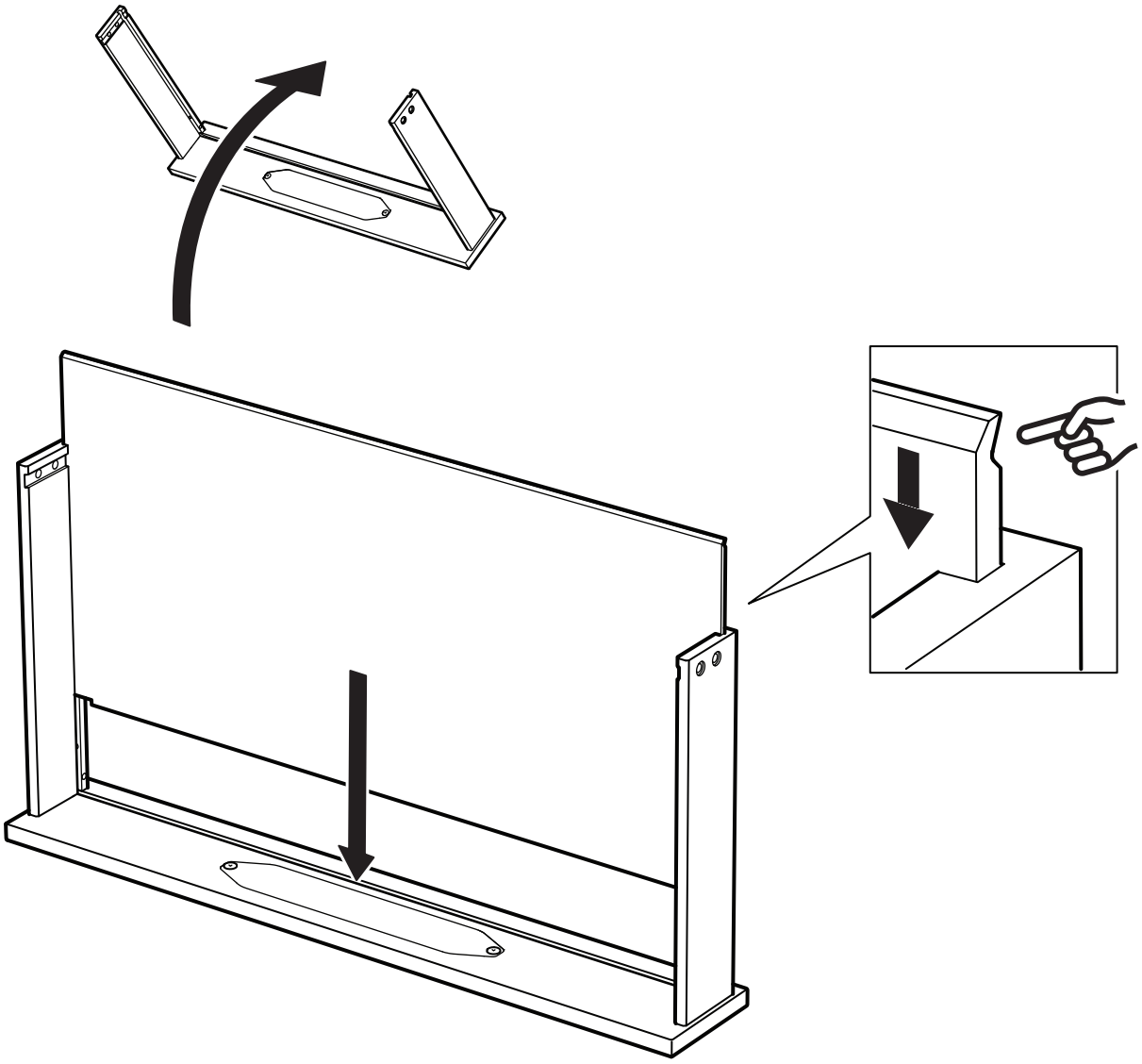

26

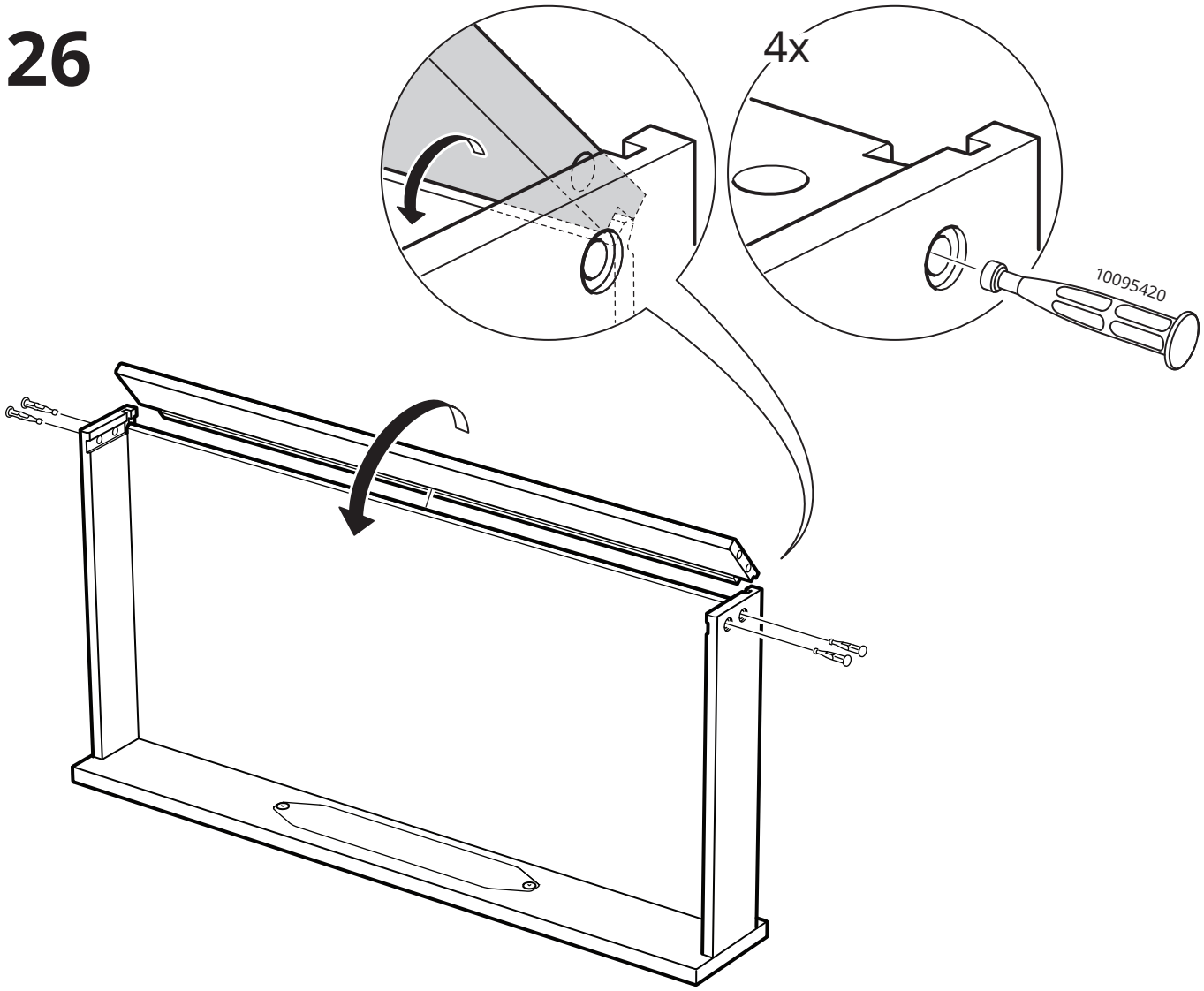

27

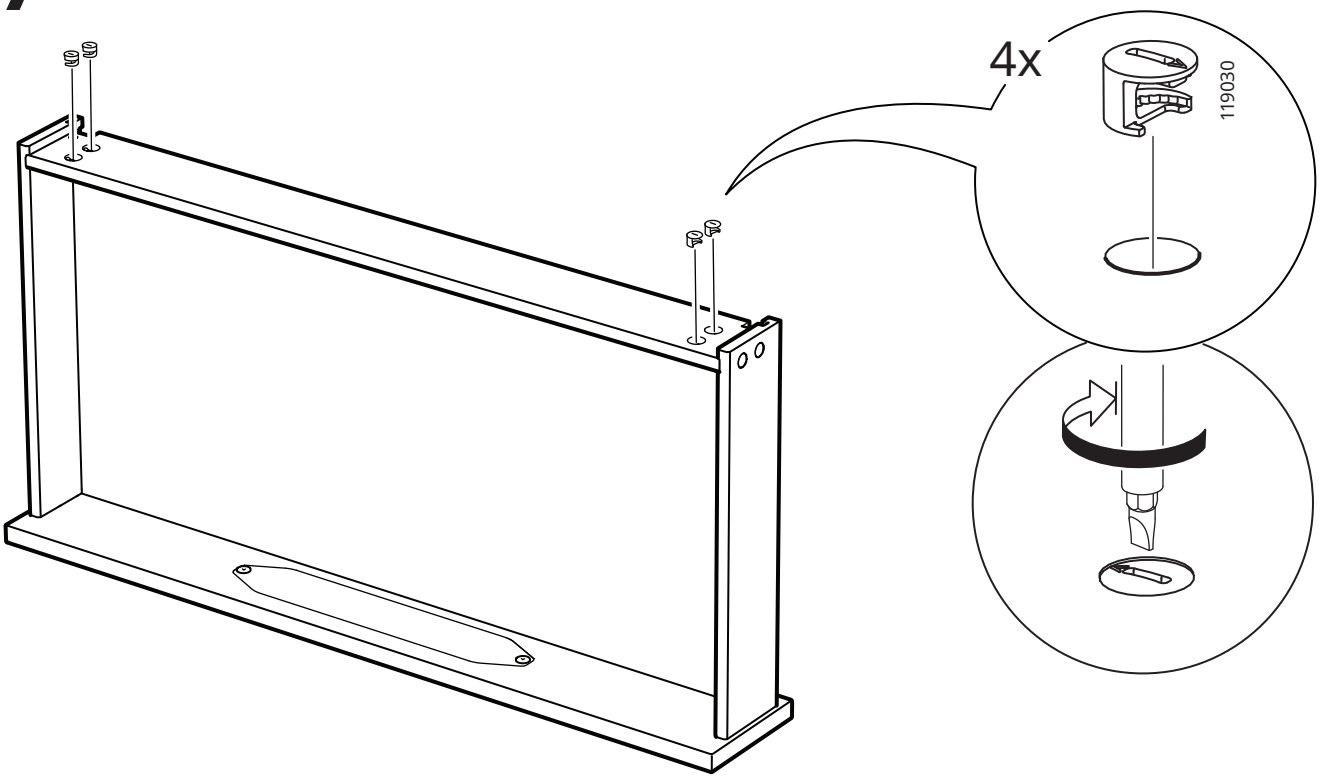

28

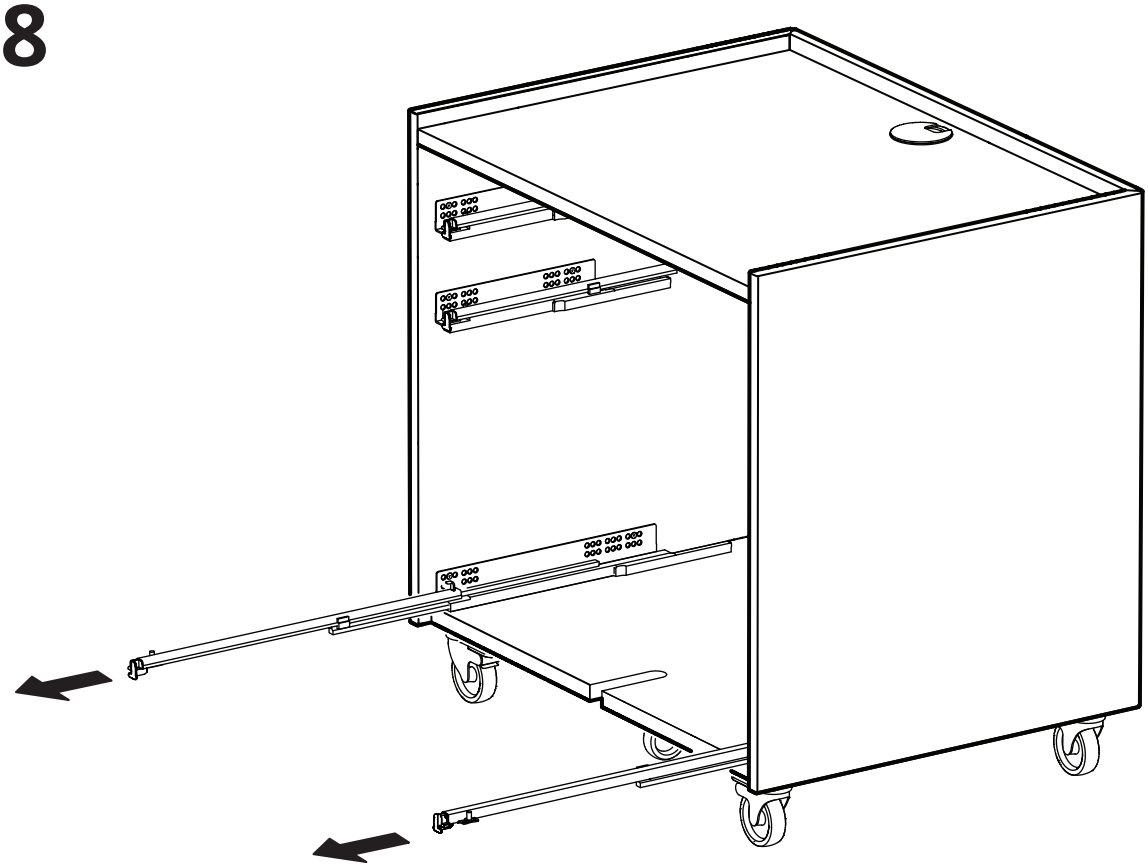

29

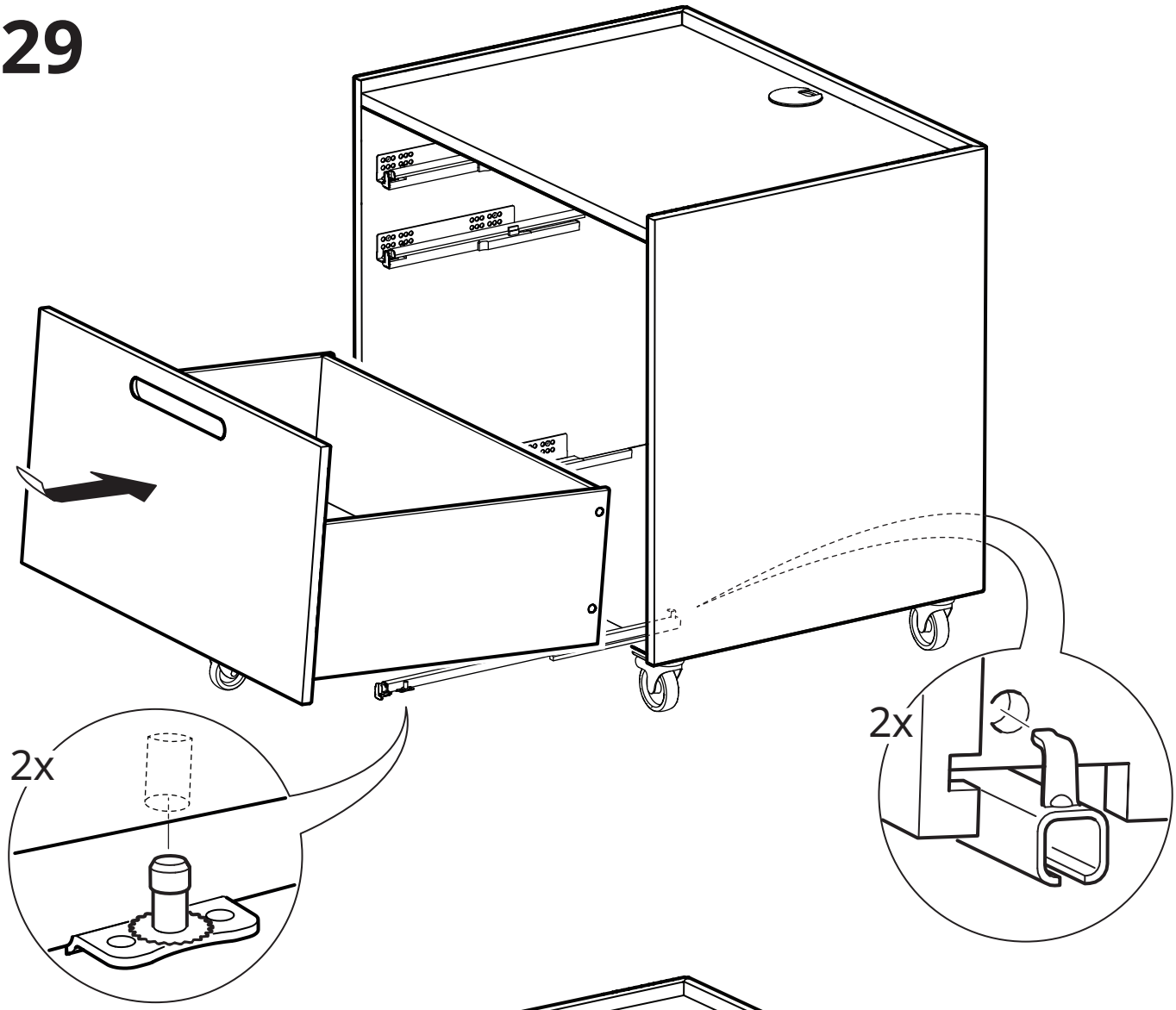

30

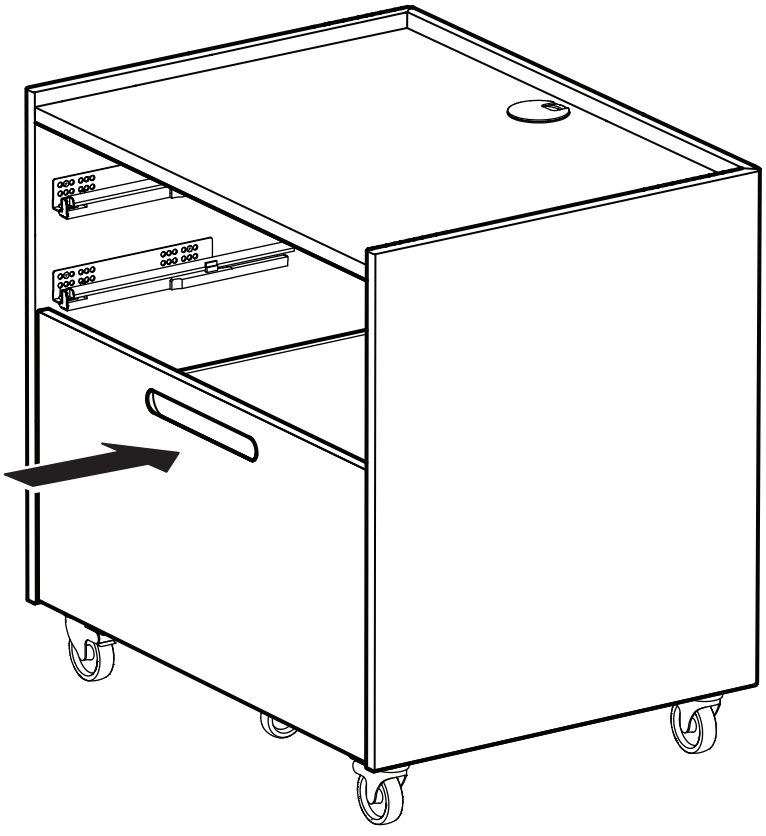

31

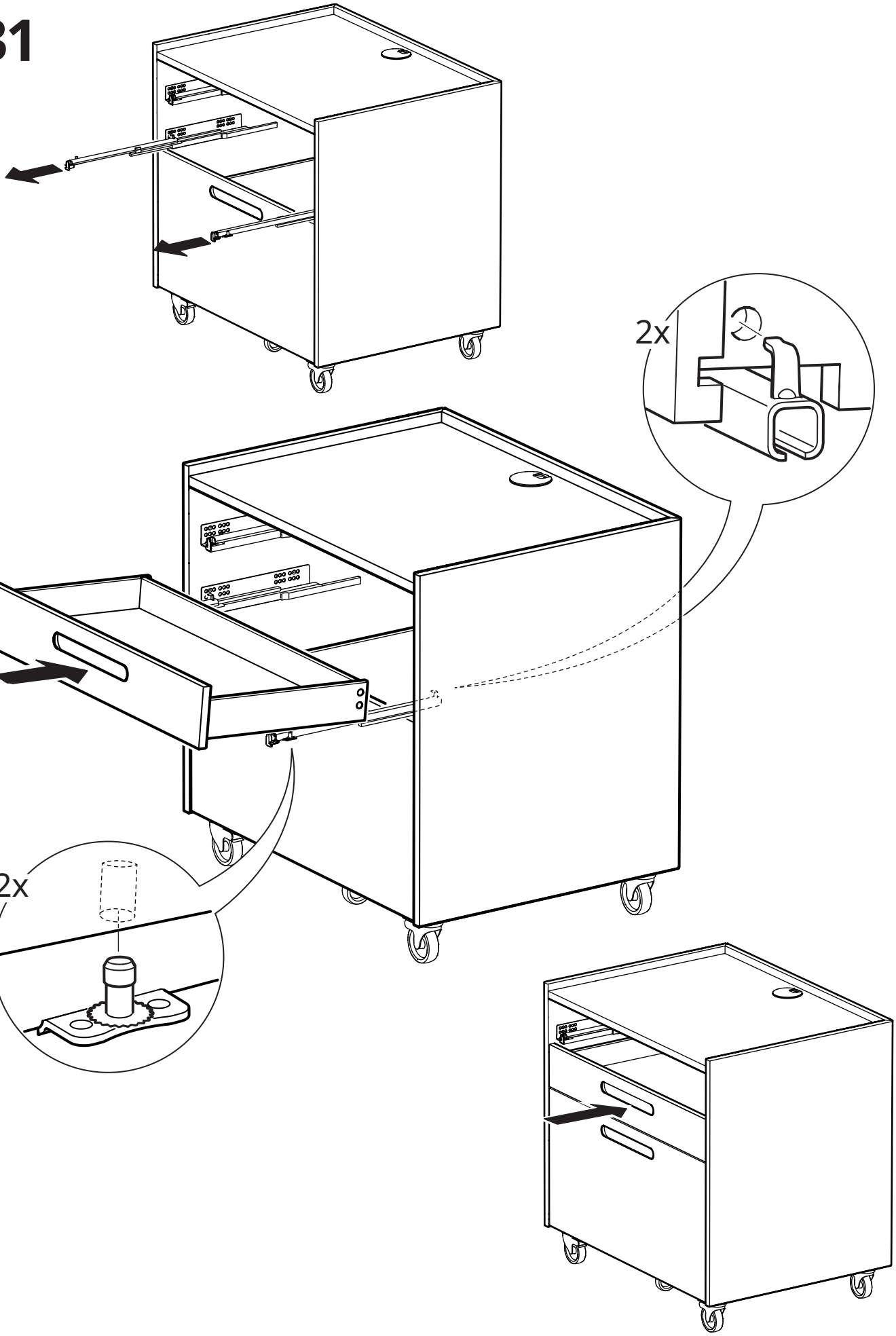

32

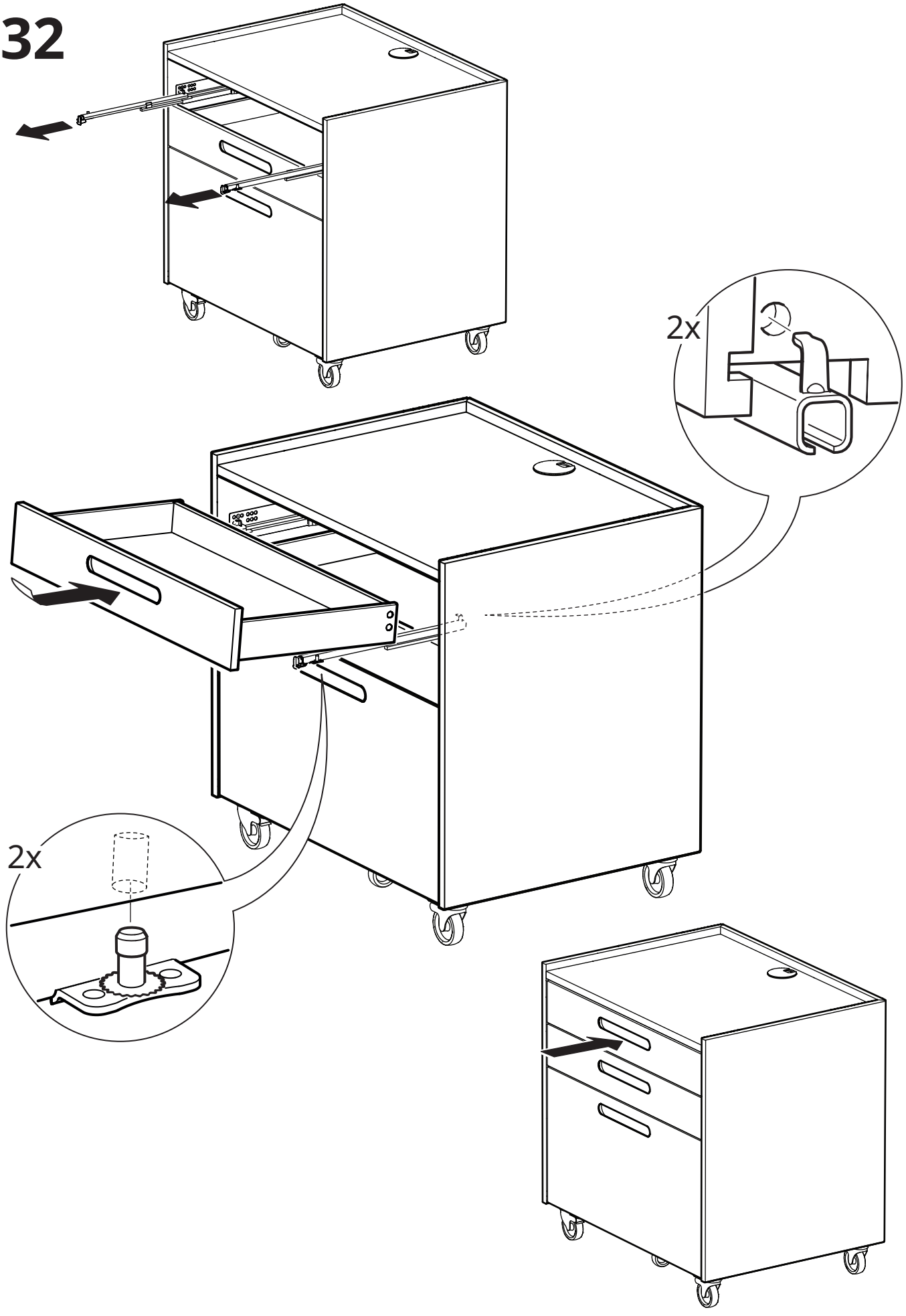

33

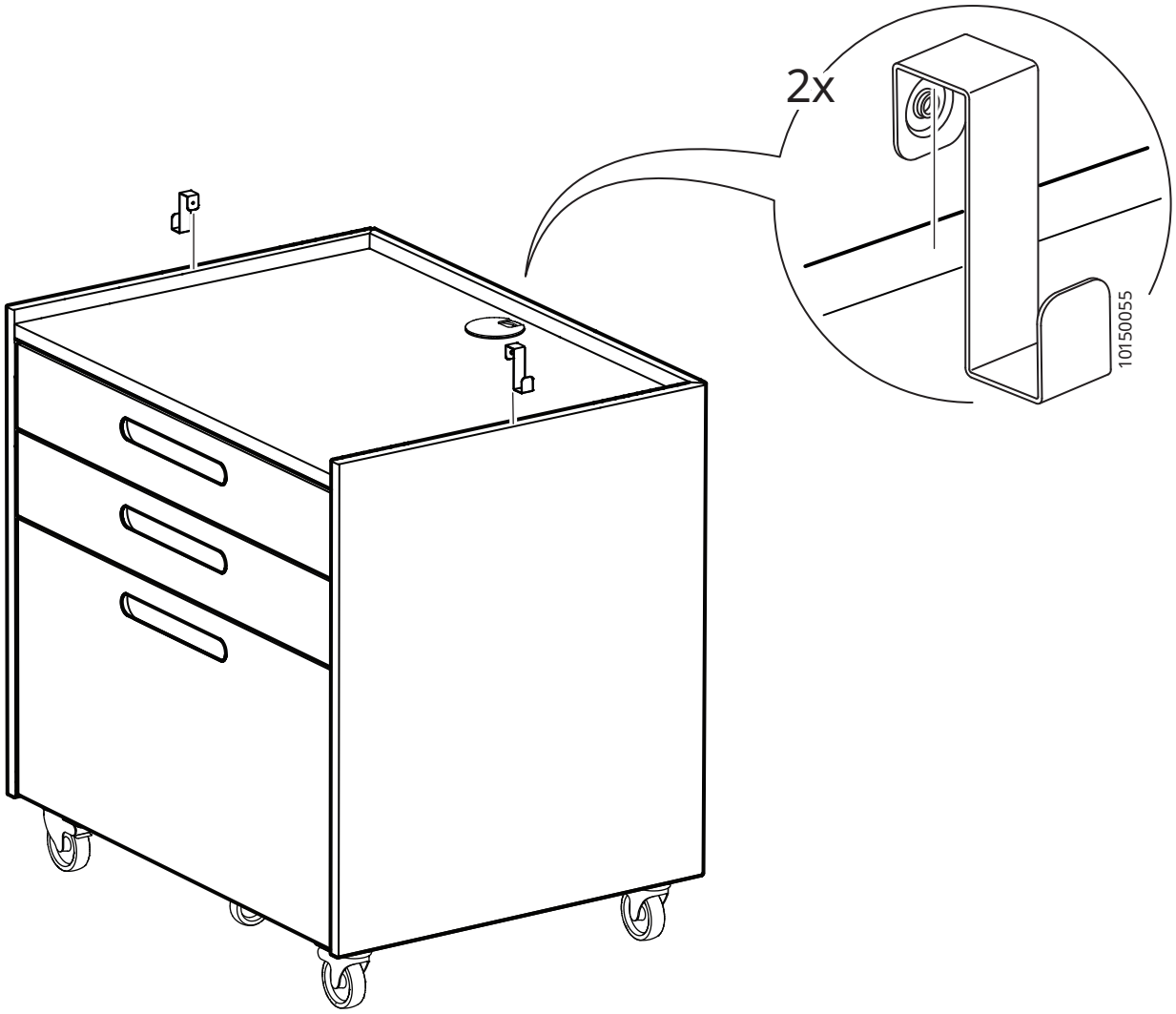

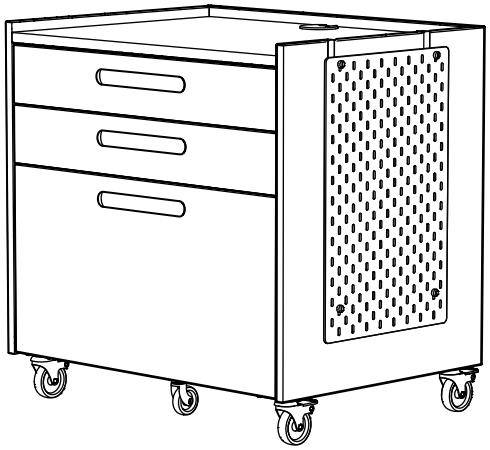

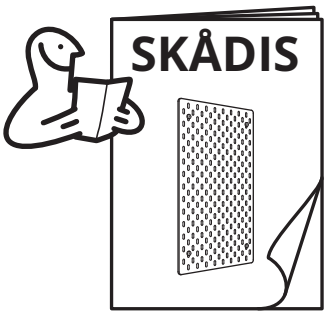

1

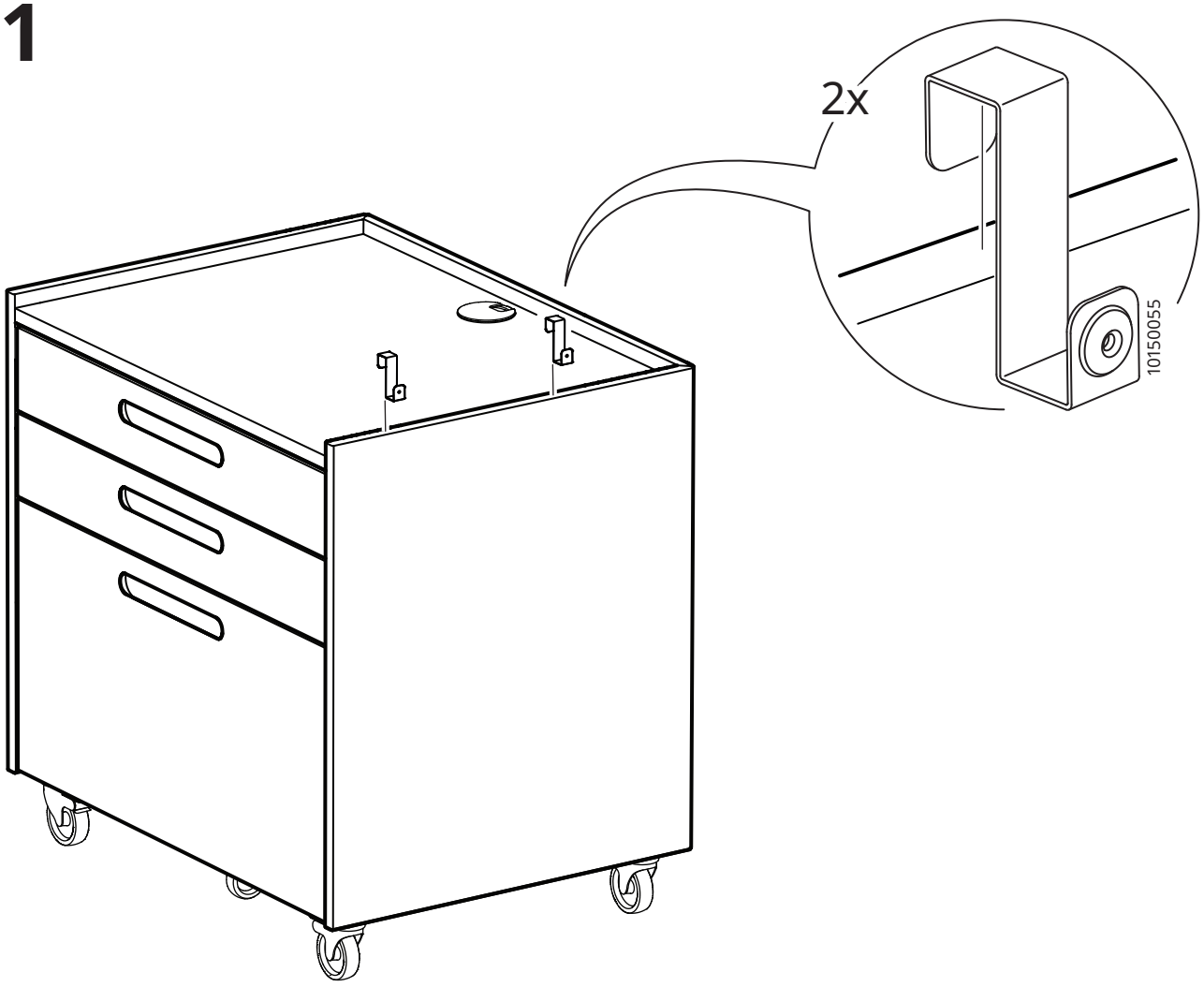

2

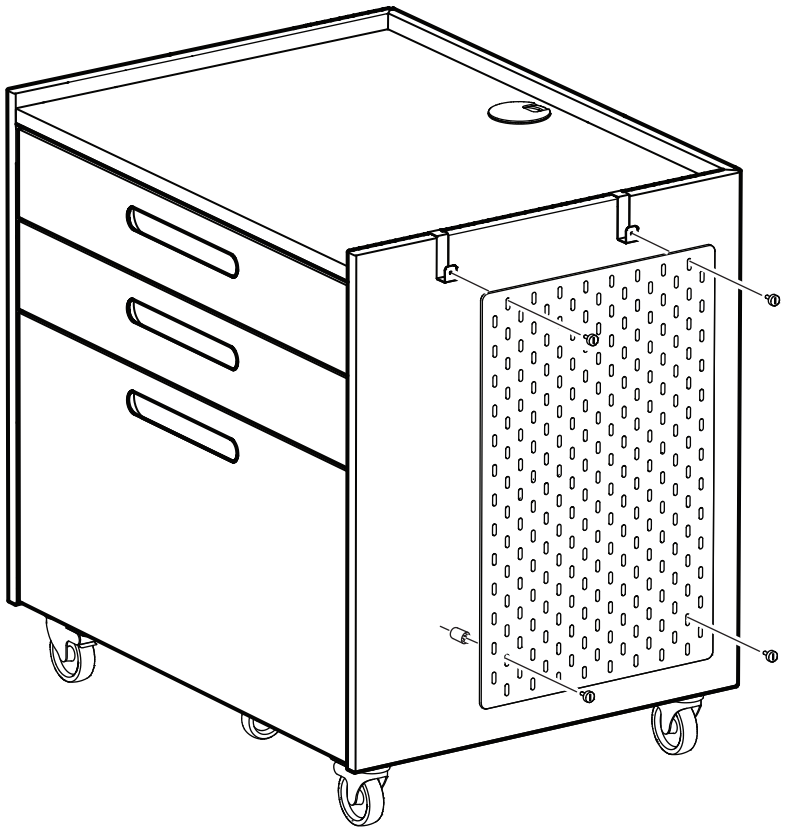

© Inter IKEA Systems B.V. 2026