SJÖELEFANT

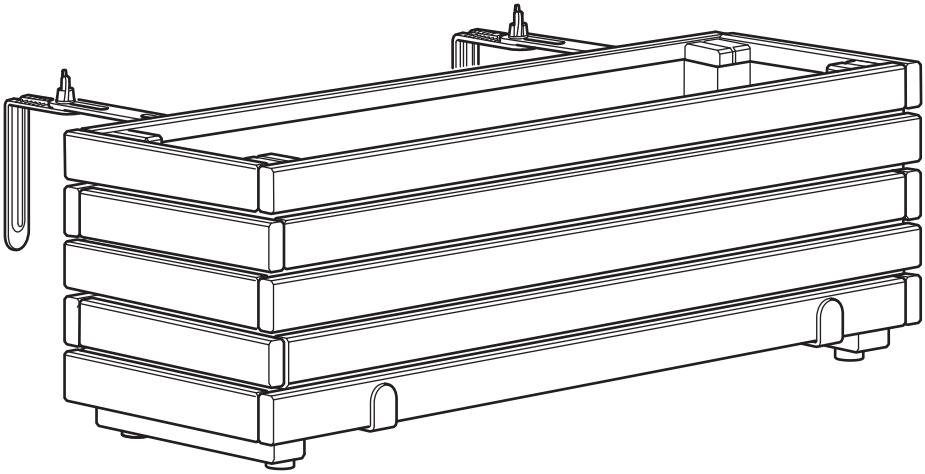

Design and Quality
IKEA of Sweden

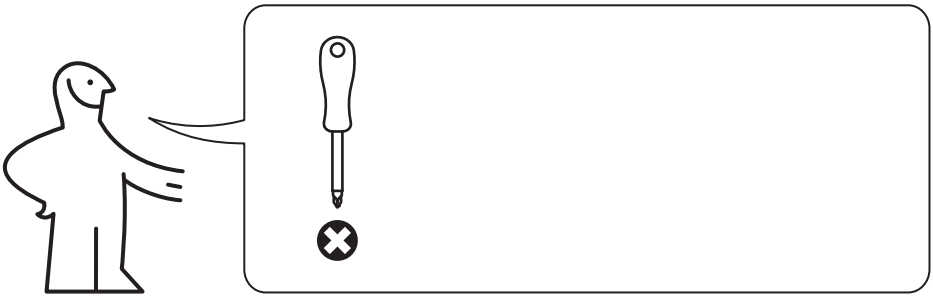

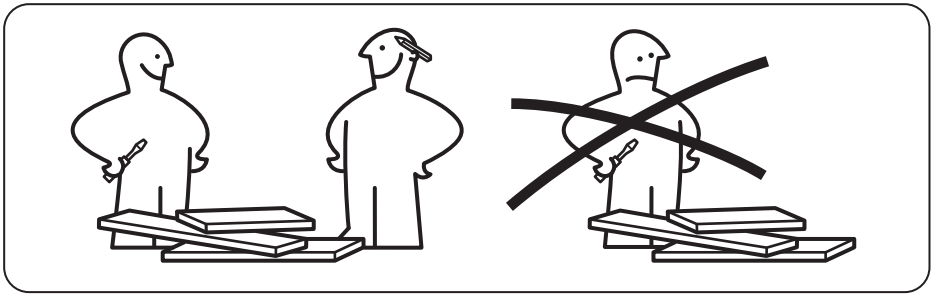

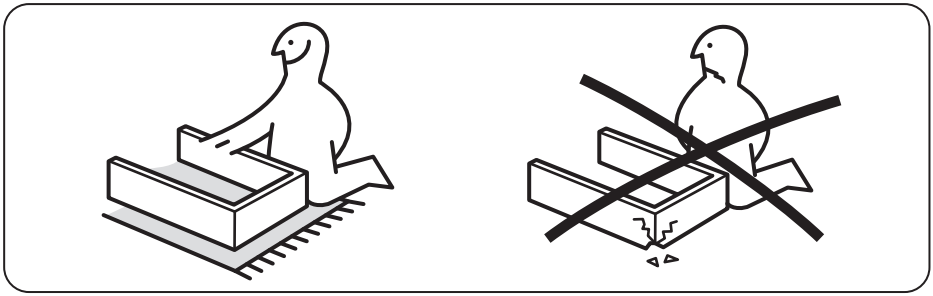

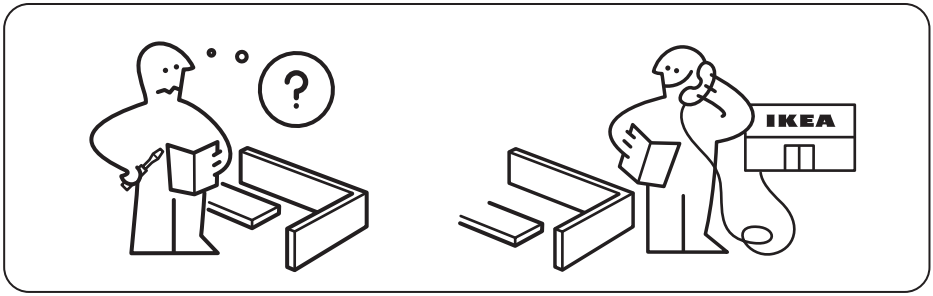
?
IKEA

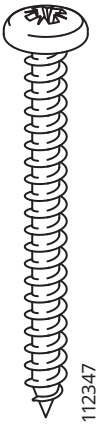

4x

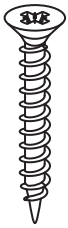

8x

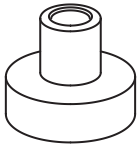

4x



4x

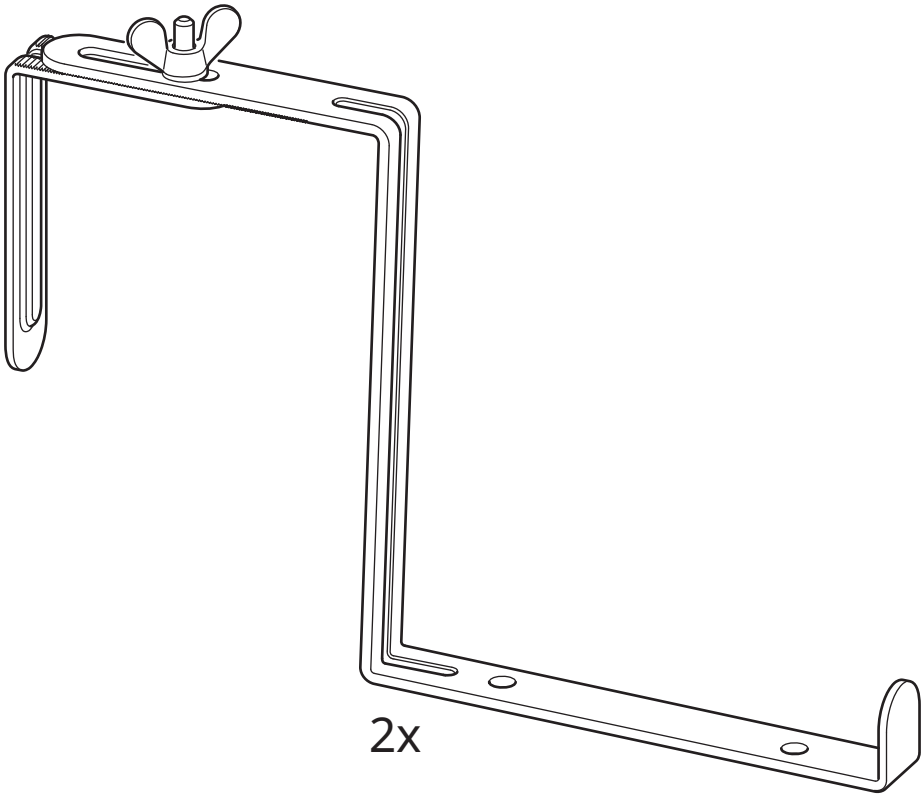

2x

1

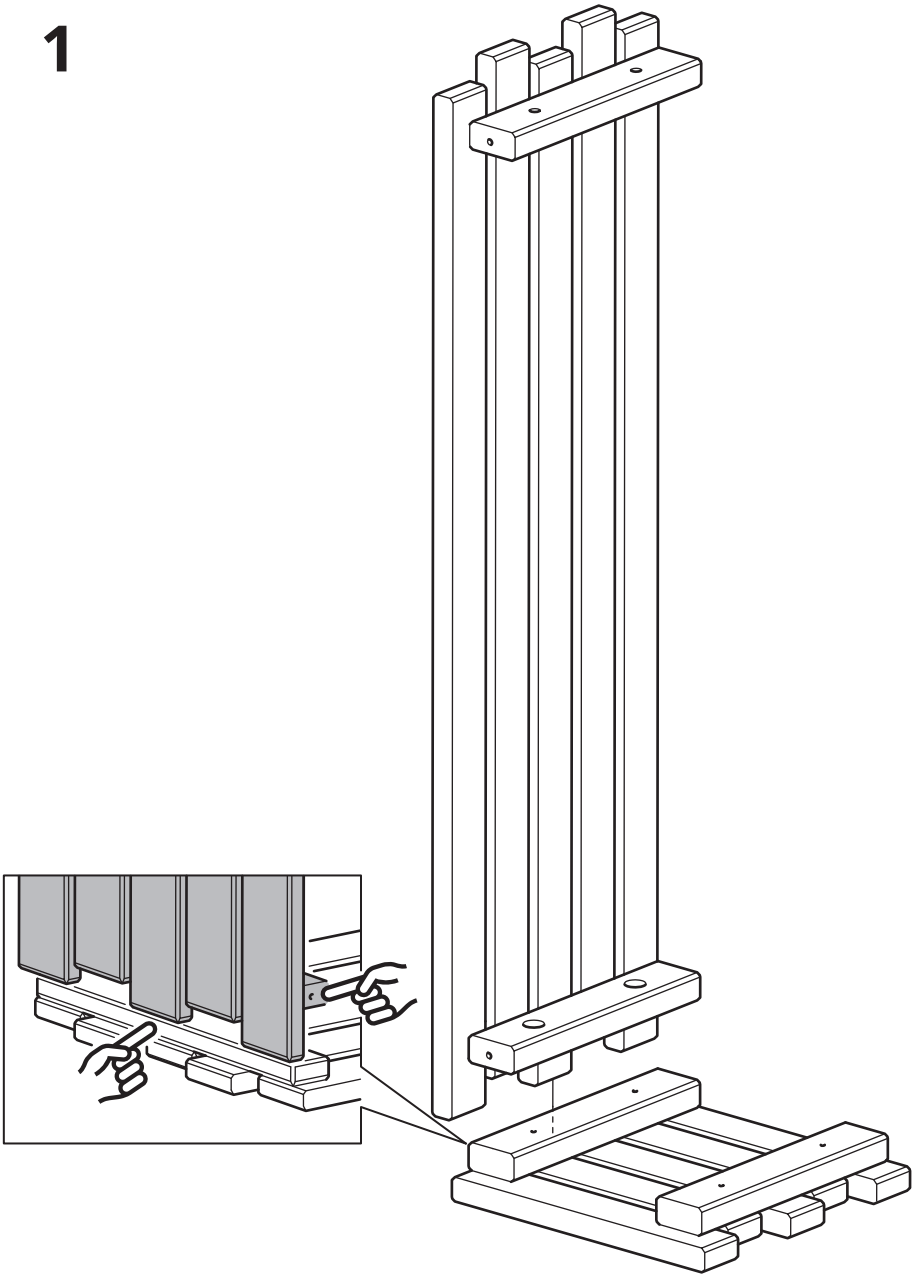

2

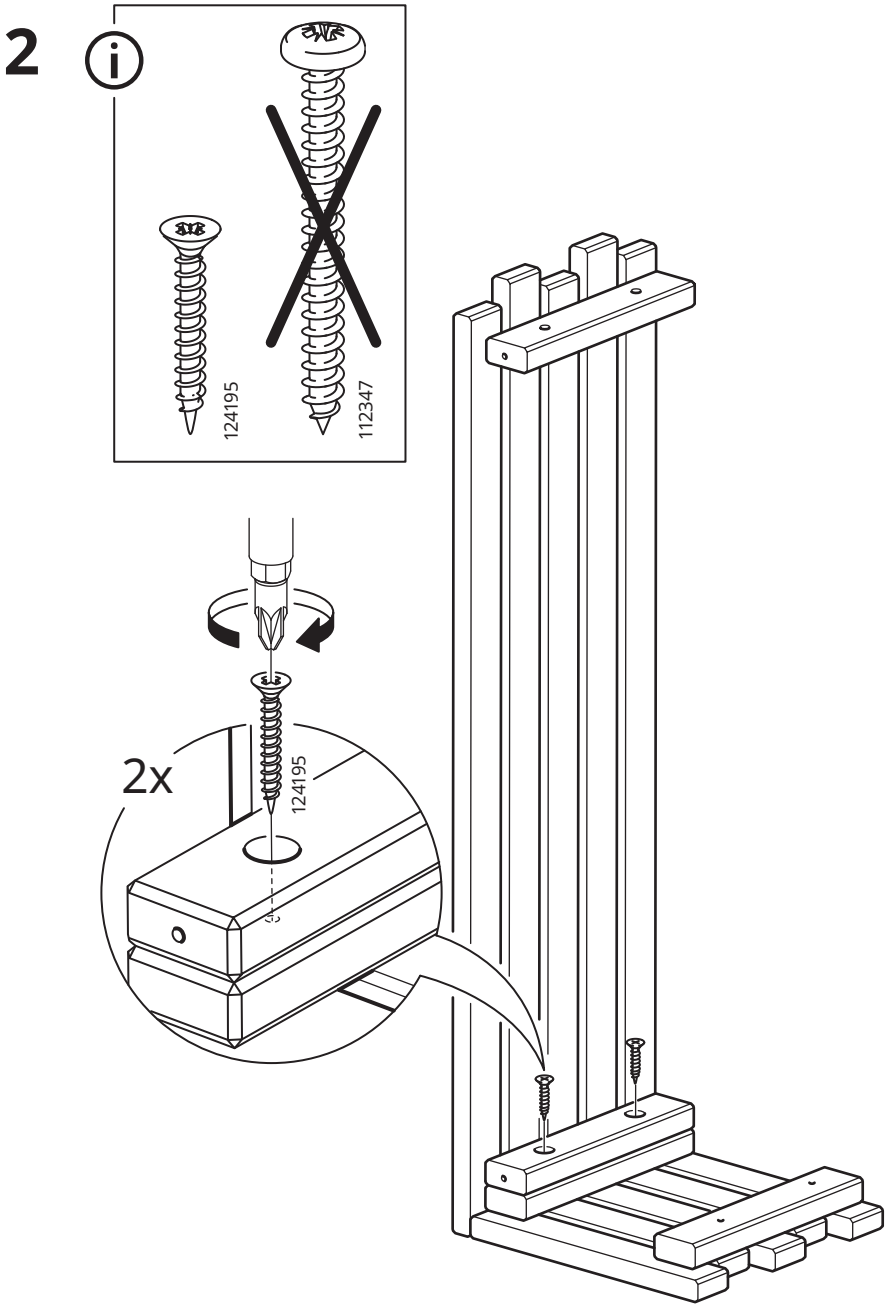

3

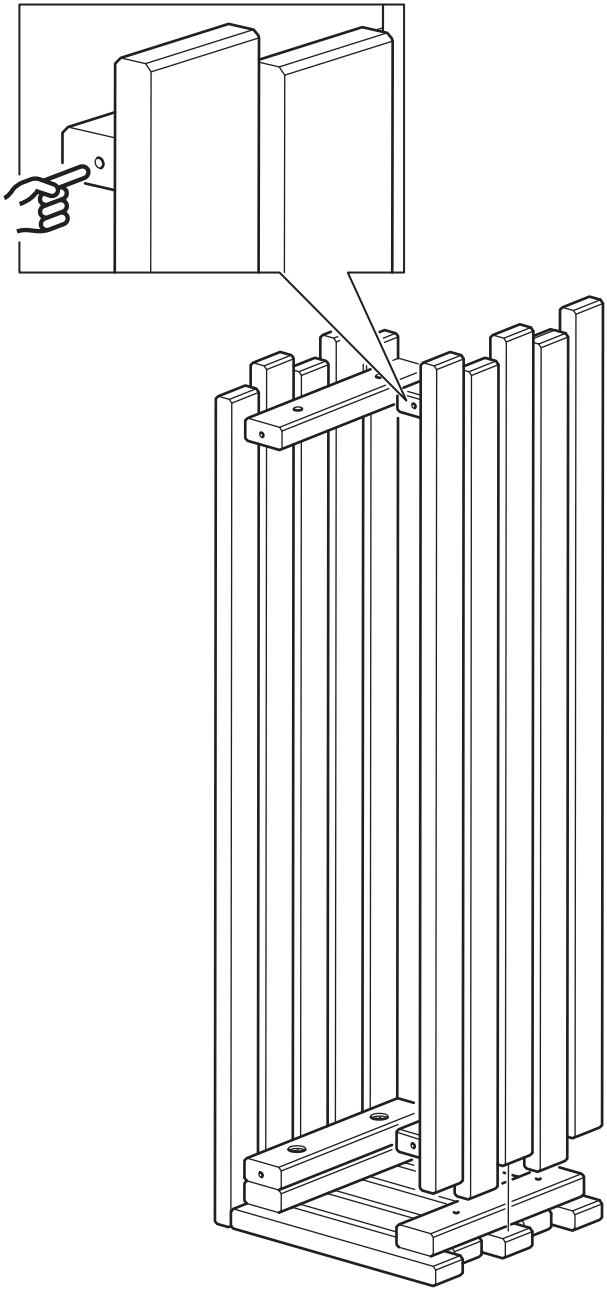

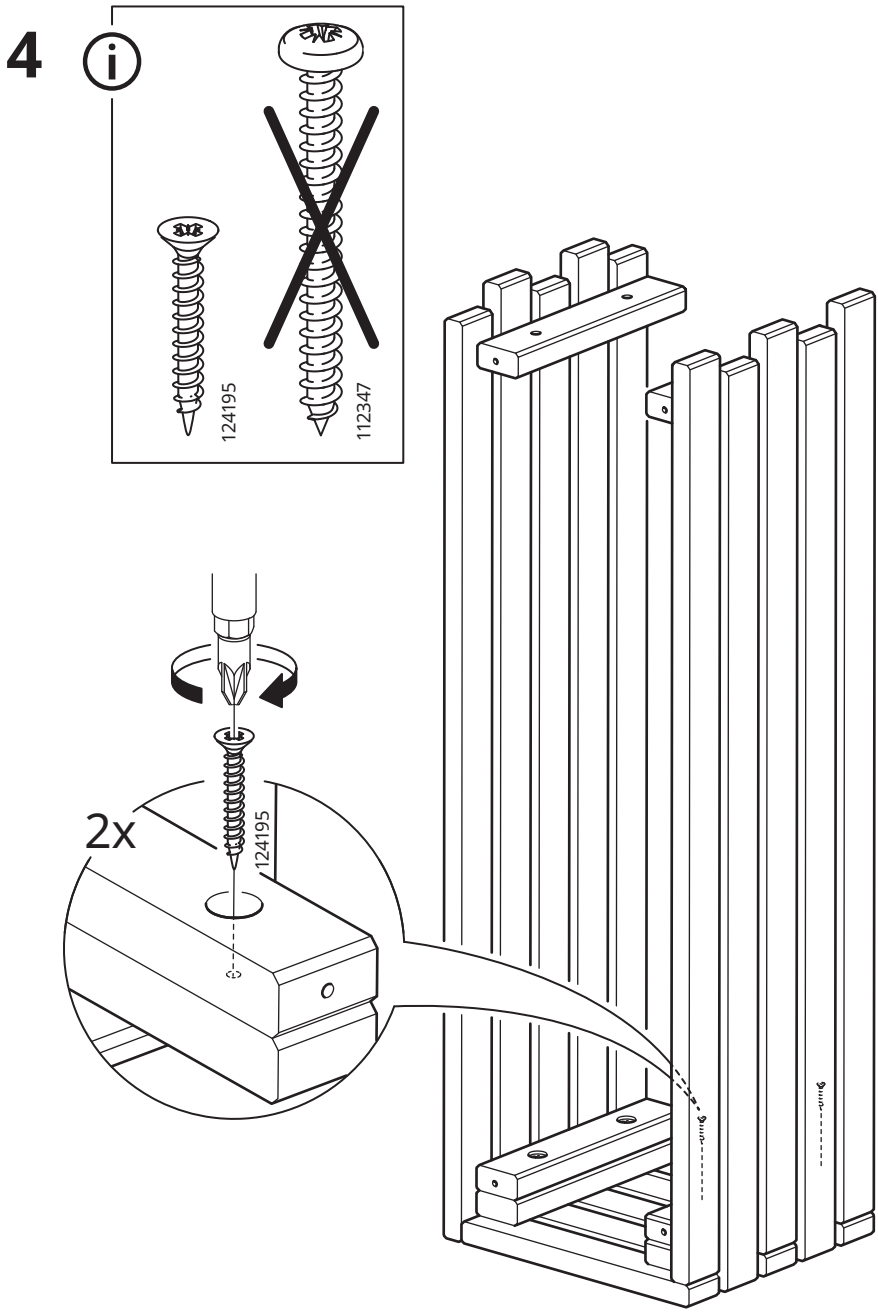
4
124195
112347
2x
124195

5

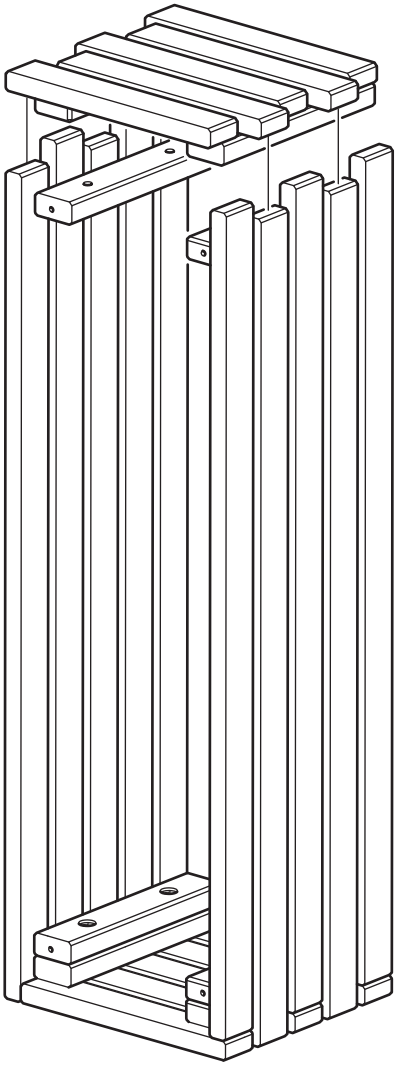

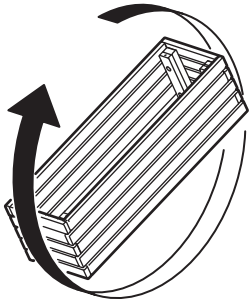

6

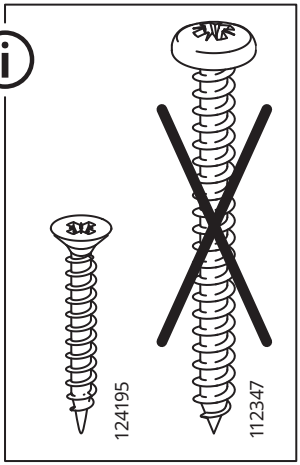

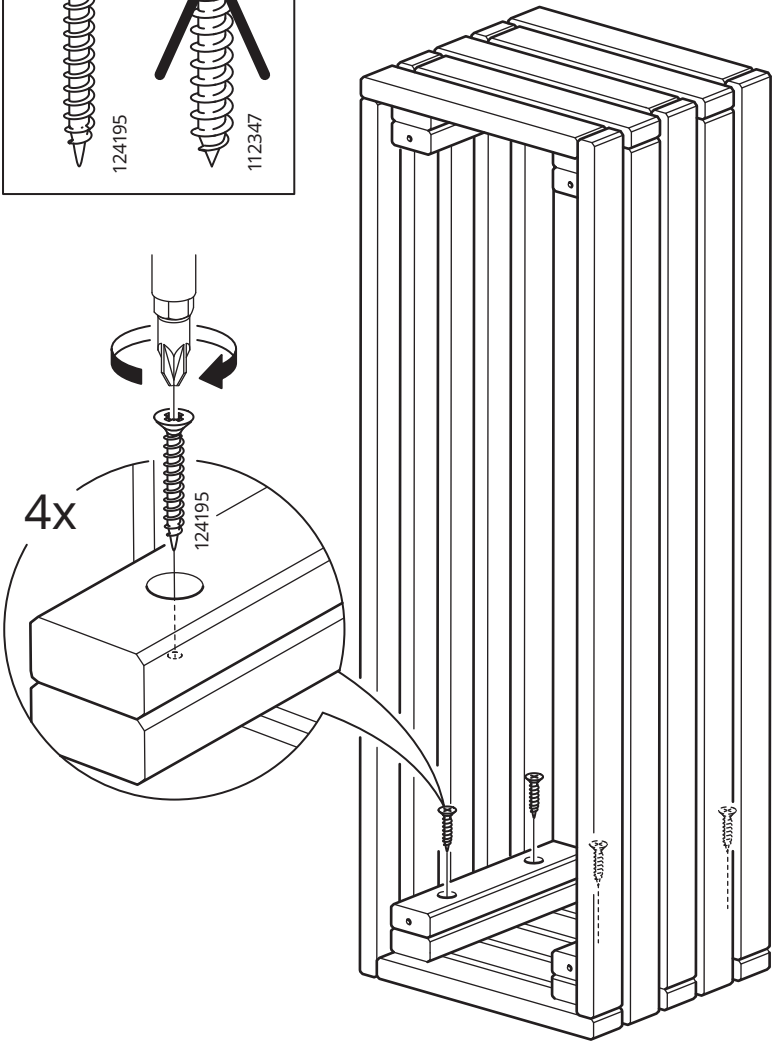

7

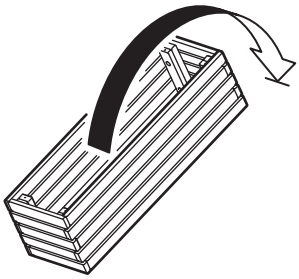

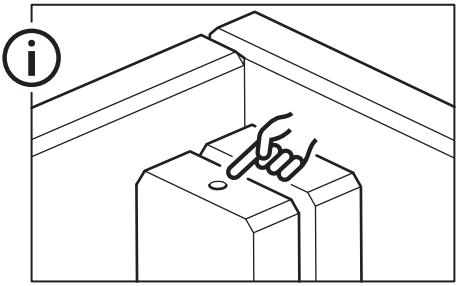

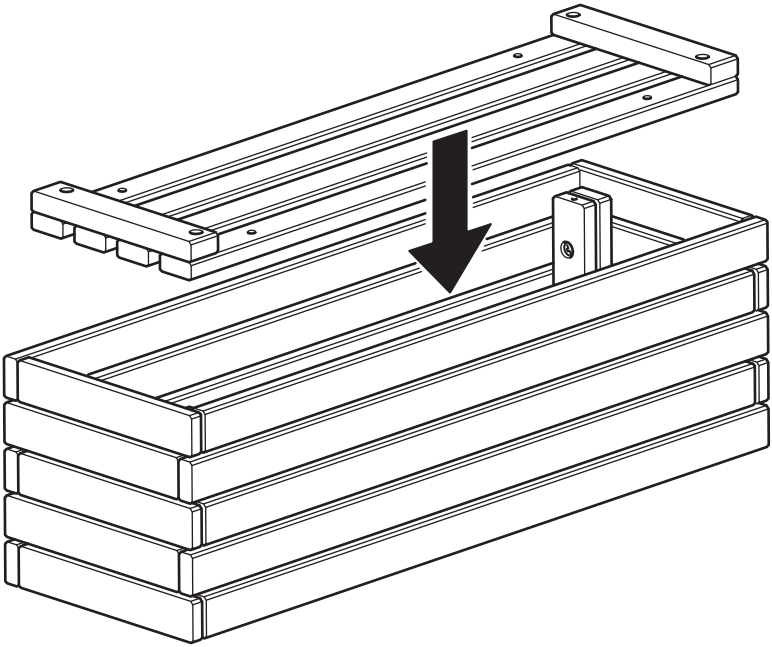

8

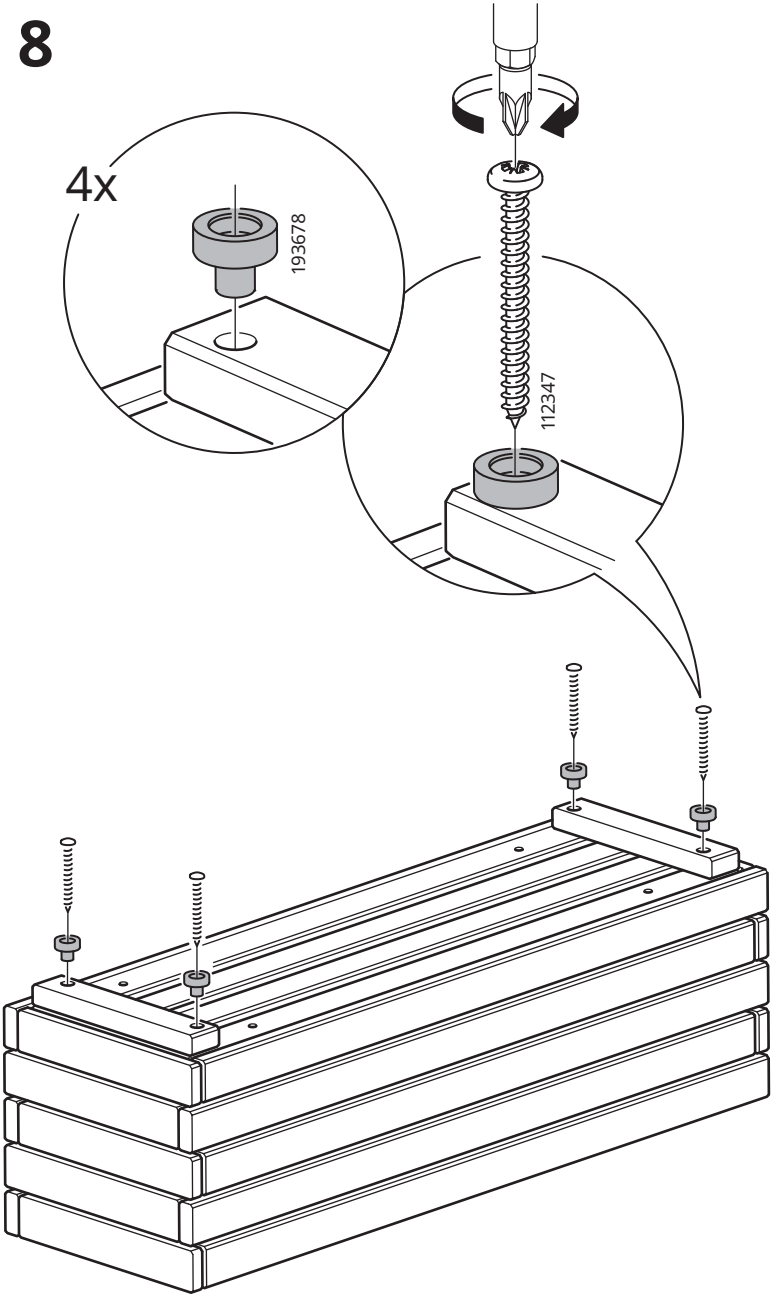

9

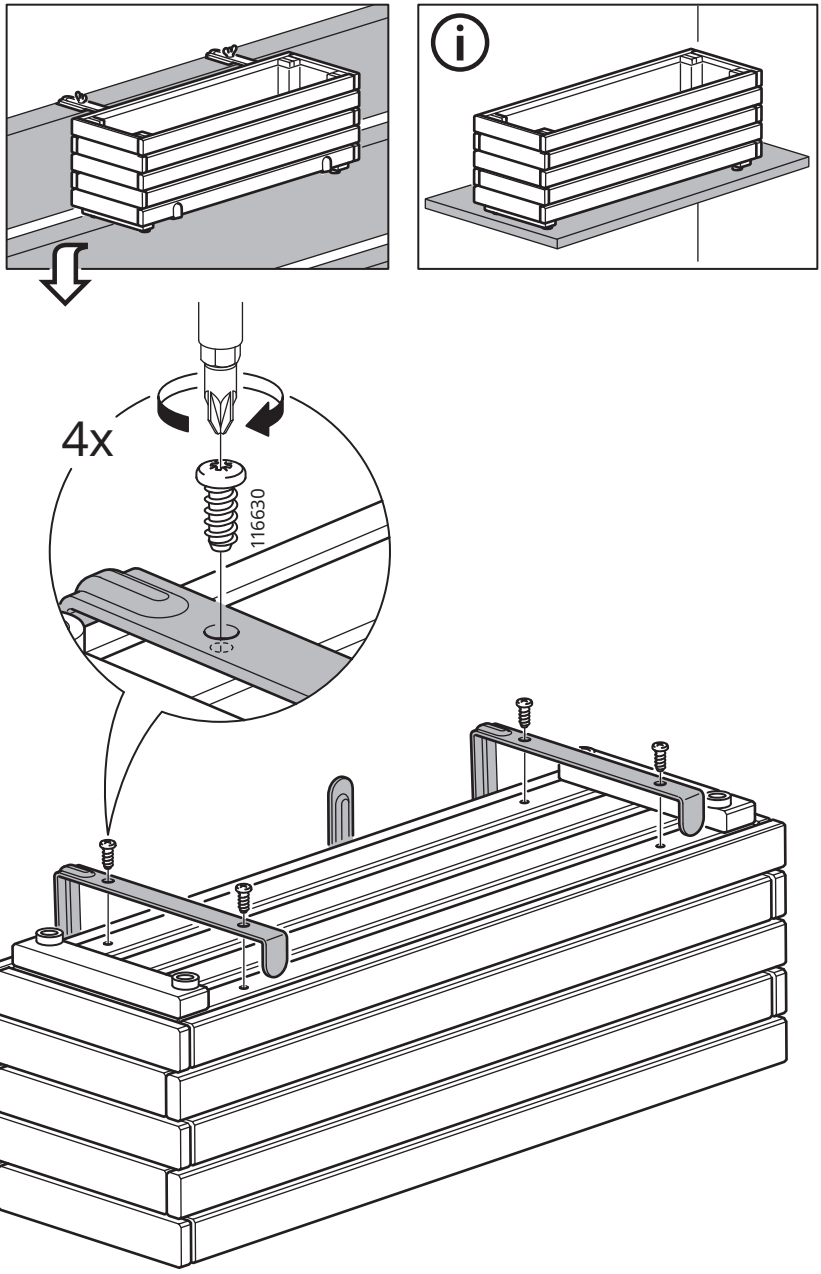

10

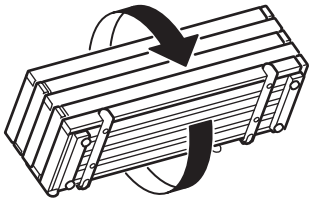

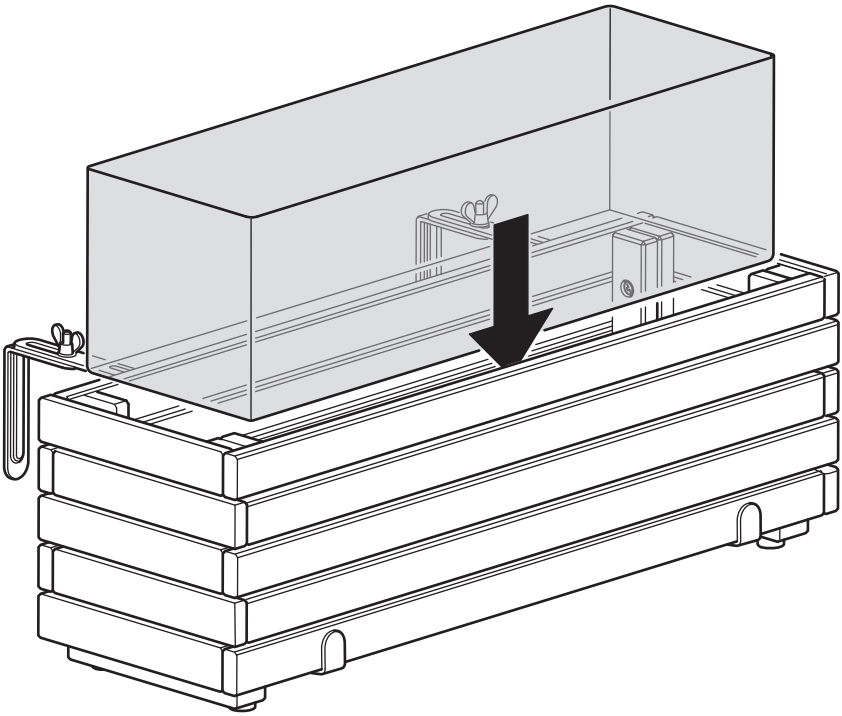

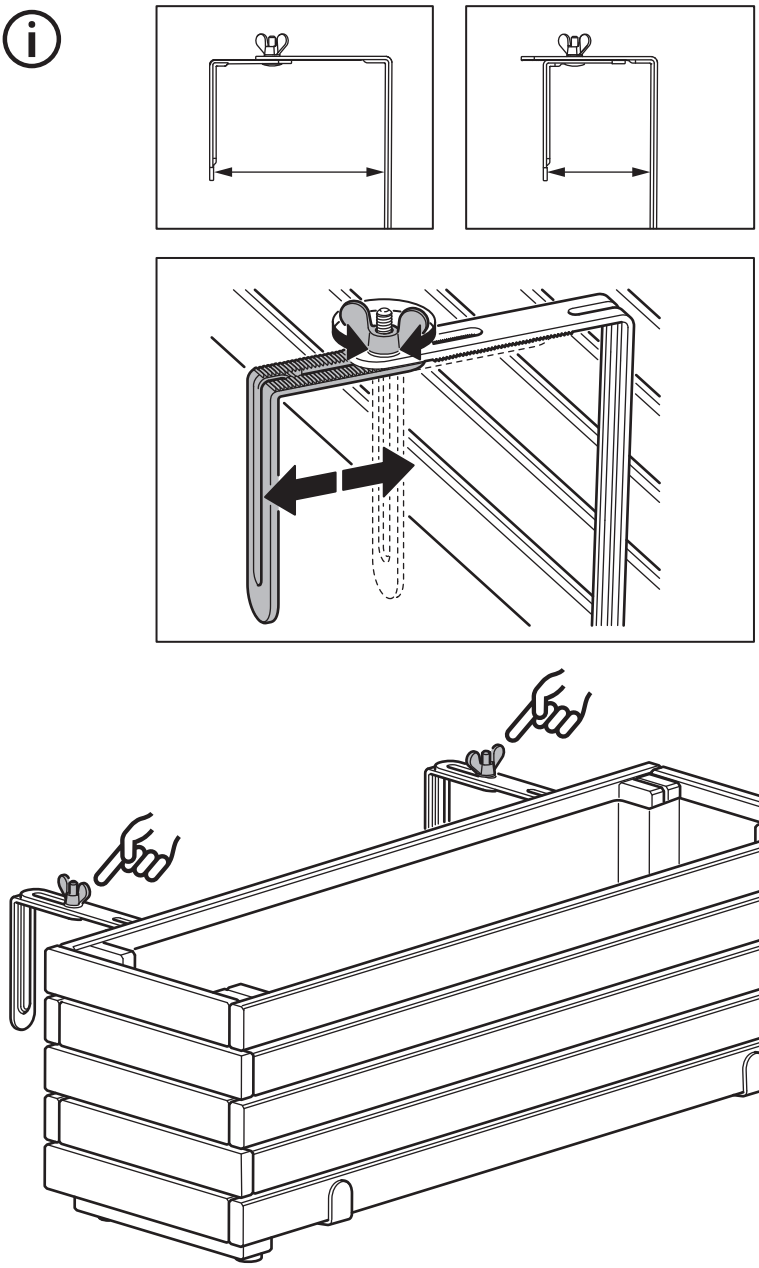

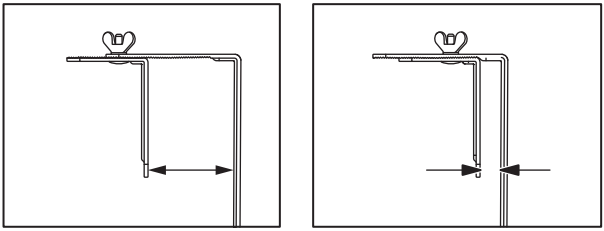

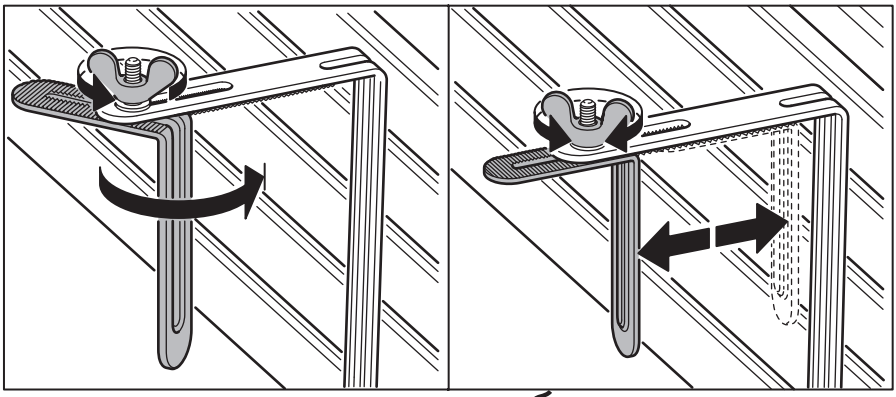

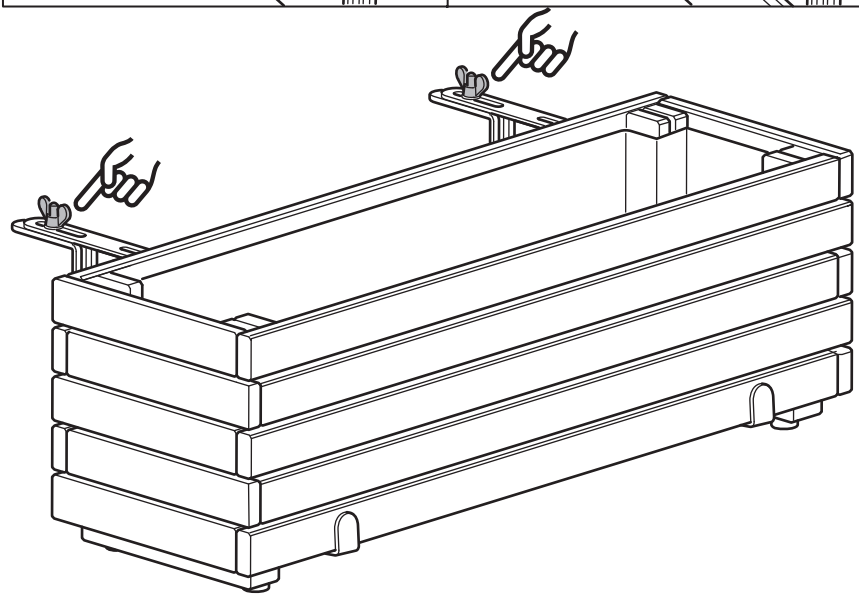

© Inter IKEA Systems B.V. 2025
2026-01-21 AA-2689686-1